Tension Meter

MK Series

Model MK

SCHMIDT
control instruments

Edition MK 05.3.E

Instruction Manual

Valid as of: 01.06.2007 • Please keep the manual for future reference!

SCHMIDT · 1ST IN TENSIONMETERS WORLDWIDE

Contents

1 Warranty and liability ... 3
1.1 Notices within the instruction manual ... 3
1.2 Responsibilities of the operating company ... 3
1.3 Responsibilities of the personnel ... 3
1.4 Informal safety measures ... 4
1.5 Training of the personnel ... 4
1.6 Intended use ... 4
1.7 Dangers in handling the device ... 4
1.8 Copyright ... 4
1.9 Declaration of conformity ... 4

2 Available models ... 5
2.1 Specifications ... 5
2.2 Available option ... 6
2.3 Items supplied ... 6
2.4 Unpacking ... 6

3 Operation ... 6
3.1 Notes before starting measurement ... 6
3.2 Fastening the tension meter model MK ... 7
3.3 Inserting the material to be measured ... 7
3.4 MIN/MAX contacts (optional accessory Code D) ... 8
3.5 Verification of the MK calibration ... 9

4 Service and maintenance ... 10
4.1 Rollers ... 10

5 Cleaning ... 10

6 Verification intervals ... 10

7 Correspondence ... 11

8 Repairs ... 11

1 Warranty and liability

In principle, the supply of the device is subject to our “General Conditions of Sale and Delivery.” These have been provided to the operating company on conclusion of the contract, at the latest.

Warranty:

- SCHMIDT tension meters are warranted for 12 months.

Parts subject to wear, electronic components and measuring springs are not covered by the warranty. No warranty or liability will be accepted for bodily injury or property damage resulting from one or several of the following causes:

- Misuse or abuse of the device.
- Improper mounting, commissioning, operation and maintenance of the device (e.g. verification interval).
- Operation of the device if any safeguards are defective or if any safety and protection precautions are not properly installed or not operative.
- Failure to comply with the notices in the instruction manual regarding transport, storage, mounting, commissioning, operation, maintenance and setup of the device.
- Any unauthorized structural alteration of the device.
- Insufficient inspection of device components that are subject to wear.
- Opening the device or improper repair work.
- Disasters caused by the effects of foreign objects or by force majeure.

1.1 Notices within the instruction manual

The fundamental prerequisite for the safe handling of this device and its troublefree operation is the knowledge of the basic safety notices and safety instructions.

These instruction manual contains the most important notices for the safe operation of the device.

These instruction manual, in particular the safety notices, must be observed by any person who works with the device. In addition, the local valid rules and regulations for the prevention of accidents must be complied with.

The representations within the instruction manual are not true to scale.

The dimensions given are not binding.

General indications of direction, such as FRONT, REAR, RIGHT, LEFT apply when viewing the front of the device.

1.2 Responsibilities of the operating company

In compliance with the EC Directive 89/655/EEC, the operating company agrees to only permit persons to work with the device who:

- are familiar with the basic regulations on industrial safety and accident prevention and who have been trained in handling the device.
- have read and understood the chapter on safety and the warning notices in these instruction manual and have confirmed this with their signatures.
- are examined regularly on their safe and conscientious working method.

1.3 Responsibilities of the personnel

All persons who work with the device agree to perform the following duties before starting work:

- to observe the basic regulations on industrial safety and accident prevention.
- to read the chapter on safety and the warning notices in these instruction manual and to confirm with their signatures that they have understood them.

1.4 Informal safety measures

The instruction manual must always be kept on hand where the device is operated. Apart from the instruction manual, the general and local valid regulations on accident prevention and environmental protection must be provided and complied with.

1.5 Training of the personnel

Only trained and instructed personnel is permitted to work with the device. The responsibilities of the personnel must be clearly defined for mounting, commissioning, operation, setup, maintenance, and repair. Trainees may only work with the device under the supervision of experienced personnel.

1.6 Intended use

The device is intended exclusively to be used as a tension meter. Any other use or any use exceeding this intention will be regarded as misuse. Under no circumstances shall Hans Schmidt & Co GmbH be held liable for damage resulting from misuse.
The intended use also includes:
- Complying with all notices included in the instruction manual and observing all inspection and maintenance works.

1.7 Dangers in handling the device

The device was designed according to the state of the art and the approved safety standards. Nevertheless, its use may cause serious or fatal injury to the user or third persons, and/or an impairment of the device or of other material assets.
The device may only be applied:
- For its intended use in a faultless condition with regard to the safety requirements.
- Malfunctions that could impair safety must be remedied immediately.
- Personal protective equipment must be used according to the EC Directive 89/686/EEC.

The device must not be operated in potentiallexplosive areas and must not come into contact with aggressive substances.

1.8 Copyright

The copyright on these instruction manual remains with the company
Hans Schmidt & Co GmbH.
These instruction manual is intended for the operating company and its personnel only. They contain instructions and notices that may only be reproduced on the prior written permission of
Hans Schmidt & Co GmbH
and under indication of the complete reference data.
Violations will be prosecuted.

1.9 Declaration of conformity

Our mechanical tension meters do not belong to the EC machinery directive 2006/42/EC and do not have a CE mark.

2 Available models

The standard instruments can have the following modifications or changes:
- Deviating measuring ranges
- Material of the rollers.
- Adjustment to other materials.
The instruction manual can also be used for these instruments as their handling is the same.

Model	Measuring Range cN	*Measuring Head Width mm	**SCHMIDT Calibration Material
MK-12	3 - 12	56	Filament: 25 tex
MK-12	5 - 20	56	Filament: 25 tex
MK-12	5 - 30	56	Filament: 25 tex
MK-12	10 - 50	56	PA: 0.12 mm Ø
MK-12	10 - 100	56	PA: 0.12 mm Ø
MK-12	20 - 250	56	PA: 0.12 mm Ø
MK-12	20 - 300	56	PA: 0.20 mm Ø
MK-12	50 - 400	56	PA: 0.20 mm Ø

* Outer distance between outside guide rollers.
** Suitable for 95% of all applications. PA = Polyamide Monofilament.
If the material to be measured differs significant from the SCHMIDT calibration material in diameter, rigidity, shape, etc., we recommend calibration using customer supplied material. For this purpose a material sample of about 5 m should be supplied.
International unit of tensile force: 1 cN = 1.02 g = 0.01 N

2.1 Specifications

Calibration: According to SCHMIDT factory procedure
Accuracy: ± 1% full scale or ± 1 graduation on scale
Scale diameter: 43 mm
Temperature range: 10 - 45°C
Air humidity: 85% RH, max.
Housing material: Plastic (Makrolon)
Housing dimensions: 96 x 44 x 23 mm (L x W x H)
Weight, net (gross): Approx. 80 g (200 g)

Guide rollers:

V-grooved	Line Speed max. m/min	Roller Material
Standard	1000	Hard-coated aluminium
Code **T**	1000	Plastic (POM) black
Code **W**	1000	Nickel-plated steel

2.2 Available option

Code **D**:

Tension-detecting contacts

We recommend application of the tension-detecting screw contacts in the case of automated production sequences.

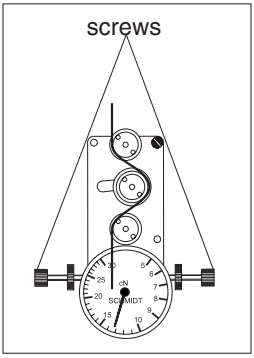

2.3 Items supplied

- Tension meter
- Instruction manual

2.4 Unpacking

Unpack the instrument and inspect it for any shipping damage. Notices of defect must be announced in writing immediately, at the latest within 7 days on receipt of the goods.

3 Operation

3.1 Notes before starting measurement

Have you read and understood the instruction manual - in particular chapter 1, “Warranty and liability”? You must not operate the device before.

Before working with the device you must put on your personal protective equipment, if necessary. For example, eye protectors, gloves, etc.
To avoid damage, do not move the center roller by hand.

Tensions that exceed the measuring range of the device by more than 100% may cause a permanent deformation of the measuring spring and must be avoided under any circumstances.

The ID plate with the serial number as well as the calibration label (optional) are provided on the bottom of the instrument, the SCHMIDT Quality Seal are provided on the surface.

3.2 Fastening the tension meter

Two mounting holes are provided for fastening the tensionmeter on site.
For the mounting hole dimensions see the above drawing (fig. 3.2).

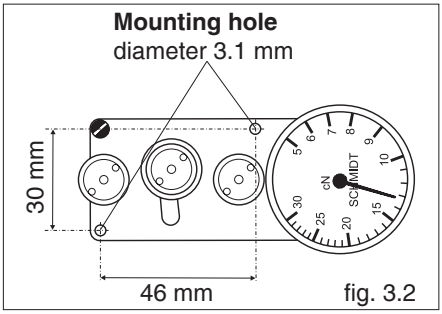

fig. 3.2

3.3 Inserting the material to be measured

- Thread the material to be measured carefully through the measuring roller and guide rollers, as shown in fig. 3.3.

It is important to ensure that the measured materials runs smoothly through the guide rollers and the measuring roller.

To avoid damage do not move the center roller by hand using force.

You can now read the measured tension on the scale.

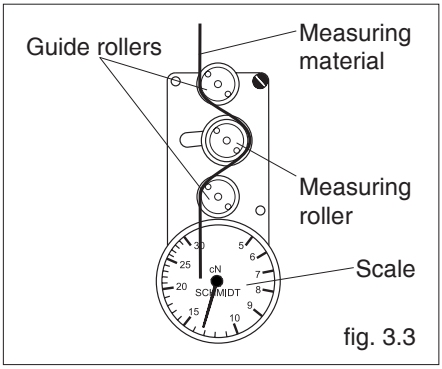

fig. 3.3

3.4 **MIN/MAX contacts** (optional accessory Code **D**)

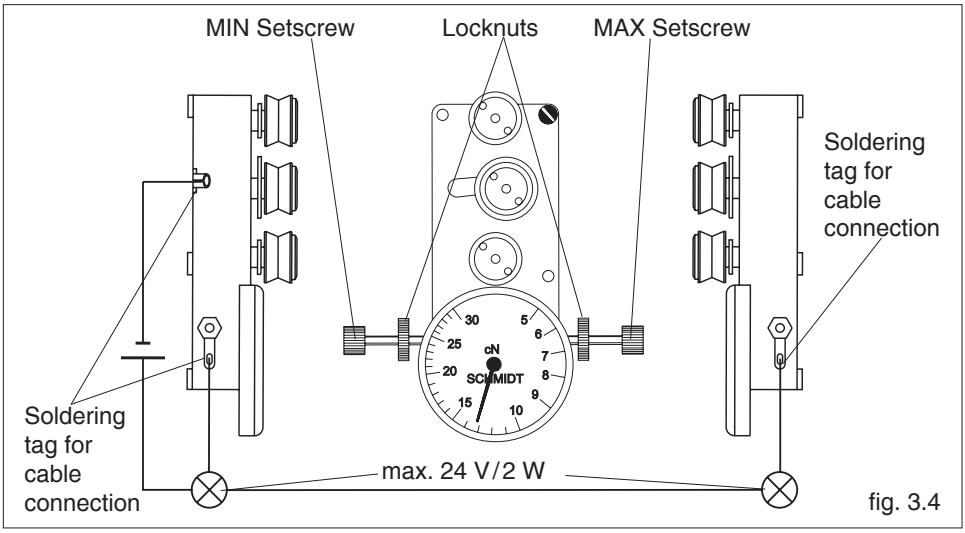

fig. 3.4

Your tension meter MK can be factory-equipped with MIN/MAX tension-detecting contacts which allow you to monitor the tolerance limits for the measured tension. These factory-installed contacts are free from potential. Instead of the lamps shown in the illustration it is of course also possible to connect other equipment, such as bell, horn, relay, etc.
The contact load specified in fig. 3.4 of max. 24 V/2 W must not be exceeded.
The setting of the desired tolerance range has to be tuned to the local conditions by experimenting.

To set the MINIMUM tolerance limit:
- Loosen the locknut on the MIN-setscrew.

  Turn the setscrew clockwise

  = to decrase the MINIMUM-tolerance

  Turn the setscrew counterclockwise

  = to incrase the MINIMUM-tolerance
- Fasten the locknut on the MIN-setscrew

To set the MAXIMUM tolerance limit:
- Loosen the locknut on the MAX-setscrew.

  Turn the setscrew clockwise

  = to decrase the MAXMUM-tolerance

  Turn the setscrew counterclockwise

  = to incrase the MAXMUM-tolerance
- Fasten the locknut on the MAX-setscrew

3.5 Verification of the MK calibration

All tension meters are calibrated with standard materials - such as polyamide monofilament (PA) - according the SCHMIDT factory procedure.
The filament sizes are noted in chapter 2.
Any difference in process material size and rigidity from the standard material may cause a deviation of the accuracy.
In 95 % of all industrial applications the SCHMIDT calibration has been proven to provide the best results and is used for comparative purposes.
If the process material differs significant in size, rigidity and shape we recommend special calibration using customer`s sample. For this purpose a material sample of 5 m should be supplied.

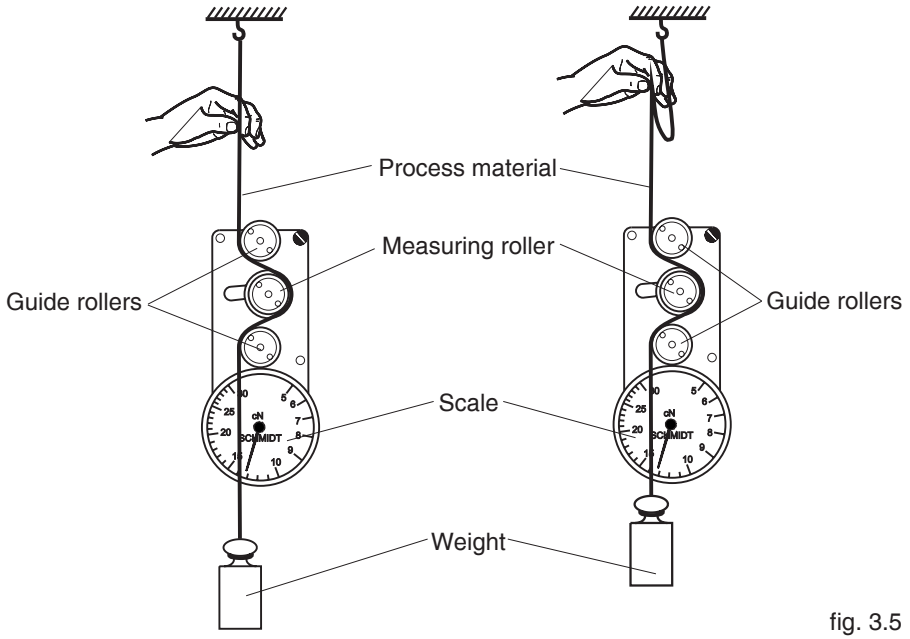

fig. 3.5

Checking procedure:
- Suspend a known weight that corresponds to the tension to be measured (pay attention to the correct unit of measure) from the process material, vertically, as shown in fig. 3.5. (Always use a fresh portion of the material to be measured).
- Before the final check, move the process material slowly up and down to compensate any friction caused by the instrument and thus ensure the repeatability.
- The tension value should be equal to the value of the suspended weight.

If this procedure shows a deviation beyond the allowable tolerance and a reliable operation is no longer allowed, the instrument has to be recalibrated or repaired.
For recalibration, return the tension meter to the factory.

4 Service and maintenance

The tension meter is easy to maintain. Depending on operating time and load, the tension meter should be checked according to the locally valid regulations and conditions (as described in chapter 3.5). The use of other test methods than the procedure described in chapter 3.5 may cause deviating measuring results.

4.1 Rollers

You should regularly inspect the rollers to assure that they are running easily and smoothly. You can replace the rollers yourself, as necessary. When ordering spare rollers, please indicate the tension meter model and the serial number (on the rear side of the tension meter).
e. g.:

Ordering of spare rollers

Model:	MK-12	(on the rigth side of the tension meter)
Serial number:	300 - 888888	(on the rigth side of the tension meter)
Standard rollers:	Order number R530013	

5 Cleaning

For cleaning the unit, do not use any

AGGRESSIVE SOLVENTS

such as trichloroethylene or similar chemicals.

NO WARRANTY OR LIABILITY

shall be accepted for damage resulting from improper cleaning.

6 Verification intervals

The question of finding the right frequency of calibration accuracy verification depends on several different factors:

- ➔ Operating time and load of the SCHMIDT tension meter
- ➔ Tolerance band defined by the customer
- ➔ Changes of the tolerance band compared to previous verifications of calibration

Therefore, the interval between verifications must be determined by the user`s Quality Assurance Department based on the user`s experience.
Assuming normal operating time and load as well as careful handling of the tension meter, we recommend a verification interval of 1 year.

7 Correspondence

Should you have any questions regarding the instrument or instruction manual, or their use, please indicate above all the following details which are given on the ID plate:

1) The tension meter model
2) The serial number

8 Repairs

Shipping instructions:

We kindly ask for return free of charge for us, if possible by airmail parcel. All occurring charges, if any (such as freight, customs clearance, duty etc.), will be billed to customer. For return from foreign countries, we ask you to include a proforma invoice with a low value for customs clearance only, e.g. 50 Euro, each and to advise the shipment in advance by fax or e-mail.

i **To avoid unnecessary follow-up questions, and the resulting loss of time or possible misunderstandings, please return the tension meter with a detailed fault description to our service department. Please indicate in your order whether you require an Inspection Certificate 3.1 according to DIN EN 10204.**

Service address:

Hans Schmidt & Co GmbH
Schichtstr. 16
D-84478 Waldkraiburg
Germany

SCHMIDT
control instruments

SCHMIDT-Test-Instruments indispensable in production monitoring, quality control and automation We solve your measuring problems:

- Tension Meter
- Force Gauge
- Torque Meter
- Tachometer
- Speed- and Lengthmeter
- Electronic Lengthmeter
- Stroboscope
- Screen Printing Tension Meter
- Thickness Gauge
- Yarn Package Durometer and Shore Durometer
- Sample Cutter
- Balance
- Moisture Meter
- Leak Tester

More than 75 years - Worldwide -

Hans Schmidt & Co GmbH

Mailing address:
P. O. B. 11 54
84464 Waldkraiburg Germany
Shipping address:
Schichtstr. 16
84478 Waldkraiburg Germany

Phone:
int. + 49 / (0)8638 / 9410-0
Fax:
int. + 49 / (0)8638 / 4825
int. + 49 / (0)8638 / 67898

e-mail:
info@hans-schmidt.com

Internet:
http://www.hans-schmidt.com