Tension Meter

ZT Series

Model *ZTS*
ZTA
ZTS-DPU
ZTA-DPU
eZT

SCHMIDT
control instruments

Edition *ZT 02.E*

Operating Instructions

Valid as of: 01.01.2022 - Firmware 5.0 or later • Please keep the manual for future reference!

SCHMIDT · ALL OVER THE TECHNICAL WORLD

Precautions

Cautions of overload

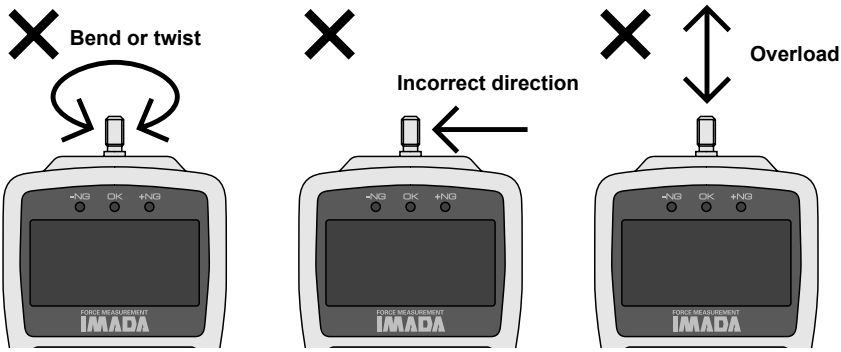

- Keep in mind that this unit will break down if the force exceeding capacity is applied irrespective of power status.
- If the force exceeding approx. 110% of capacity is applied, the following message shows up while the power is on. In this case, please stop applying force immediately. The sensor breaks down when it is overloaded.

- The sensor breaks down when apply force to bend or twist the measuring shaft.

Cautions of use

- Use this product only for measurement.
- Read these instructions before using this product. Use it based on this instruction.
- Avoid misuse or rough treatment.
- Do not disassemble or tamper with this product.

Cautions of storage

- Please avoid oil, dust, and heat and high humidity, and keep it in a cool place.
- Please keep it after use in an attached carrying case to prevent from force or a shock applying to a measuring shaft.
- In case you remove the dirt of this unit, please do not use organic solvents, such as thinner.
- Very small electrical current is consumed also at the time of a power OFF. Please use it after charging, when it is not used for a long period of time.

Cautions of an accuracy warranty

- Although based on operating frequency or force range, measurement accuracy deteriorates little by little. We recommend periodical calibration.
- The specification temperature range of this is 0 to 40 Celsius degrees. In order to carry out more exact measurement, please use it by temperature within the limits set to the inspection certificate.
- Please turn on the power 10 minutes before starting measurement in order to stabilize the indication of value.

Cautions on safe

- During destruction, breaking points, or performing another test where fragments could fly out, always wear protection for the eyes and body.
- Be sure to use attached AC adapter. Otherwise, it may cause inaccuracy of measuring, fire, or a breakdown.
- When you attach this unit on a test stand etc., please read this instruction manual well and attach it correctly.

Error Messages

- The display may show error messages such as ‘MEMORY ERROR’ or ‘FATAL ERROR’ when there is a damage found in the memory data or the setting data. There is a possibility of some internal problems. Please contact our distributor.

Index

Features

Thank you for choosing IMADA digital force gauge ZT series. This product has an easy-to-read display with superior specifications, and can be used for various kinds of tensile / compression measurement.
Organic EL display, on-demand multi display and information in English lead easy operation.
The high speed data sampling (2000 data / sec.) also helps more accurate measurement even for the measurement of sudden force change such as destruction test.
With eZT series, one amplifier can be connected to various load cells of your choice.
The accurate graph can be made with optional software, which supports evaluation and analyze of measurement.
Please make sure to thoroughly read this instruction manual before use to obtain the maximum benefit from this instrument.

1. Models

ZT series consists of ZTA series with USB memory connection and displacement output function, and ZTS series without the connection and function.
The separated sensor models are also available.
eZT series enable one amplifier to connect to various load cells of your choice.
eZT series have same functions as ZTA series.

Model		Capacity	Display	Resolution
Standard	**ZTA(ZTS)-2N**	2N	2.000N	0.001N
	ZTA(ZTS)-5N	5N	5.000N	0.001N
	ZTA(ZTS)-20N	20N	20.00N	0.01N
	ZTA(ZTS)-50N	50N	50.00N	0.01N
	ZTA(ZTS)-100N	100N	100.0N	0.1N
	ZTA(ZTS)-200N	200N	200.0N	0.1N
	ZTA(ZTS)-500N	500N	500.0N	0.1N
	ZTA(ZTS)-1000N	1000N	1000N	1N
High Capacity	**ZTA(ZTS)-2500N**	2500N	2500N	1N
	ZTA(ZTS)-5000N	5000N	5000N	1N
Separated Sensor *	**ZTA(ZTS)-DPU-2N**	2N	2.000N	0.001N
	ZTA(ZTS)-DPU-5N	5N	5.000N	0.001N
	ZTA(ZTS)-DPU-20N	20N	20.00N	0.01N
	ZTA(ZTS)-DPU-50N	50N	50.00N	0.01N
	ZTA(ZTS)-DPU-100N	100N	100.0N	0.1N
	ZTA(ZTS)-DPU-200N	200N	200.0N	0.1N
	ZTA(ZTS)-DPU-500N	500N	500.0N	0.1N
	ZTA(ZTS)-DPU-1000N	1000N	1000N	1N
	ZTA(ZTS)-DPU-2000N	2000N	2000N	1N
	ZTA(ZTS)-DPU-5000N	5000N	5000N	1N
	ZTA(ZTS)-DPU-10KN	10kN	10.00kN	0.01kN
	ZTA(ZTS)-DPU-20KN	20kN	20.00kN	0.01kN
eZ Connect Amplifier	**eZT**	Depends on eZ Connect load cell		

* Various kinds of load cell other than DPU are available.

2. Names and Functions

Names

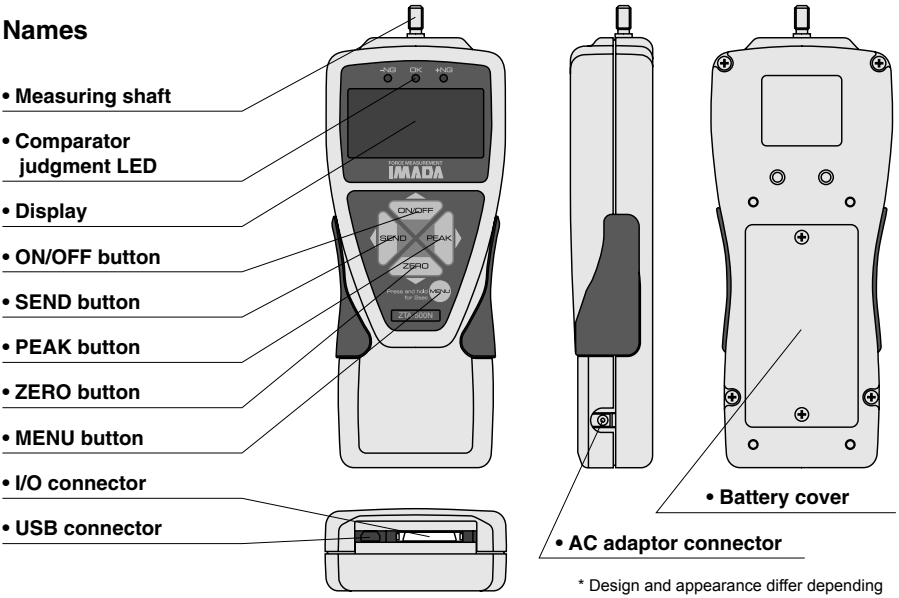

* Design and appearance differ depending on the model and range.

Functions

ON/OFF button	Turn ON/OFF the power. Select menu.
ZERO button	Zero values. Select menu.
PEAK button	Toggle between “Peak mode” and “Track mode”. Select menu.
SEND button	Save data. Send data to a printer and a computer. Select menu.
MENU button	Go to Set up mode and measurement mode. Enter settings.
Display	Show values, settings and the status.
Comparator judgment LED	Judge force values according to set comparator values.
Measuring shaft	Detect force values of tensile and compression measurement. Various kinds of attachment can be attached.
AC adaptor connector	Recharge battery with AC adaptor.
USB connector	For data sending to PC with USB cable (included). ZTA only: Save data on USB memory (excluded).
I/O connector	Connect with other equipments, i.e. test stand and PC, with optional cables to control the force gauge and the equipments.
Battery cover	Rechargeable battery inside. The battery can be replaced.*

* Refer to the page 41.

2. Names and Functions

Display

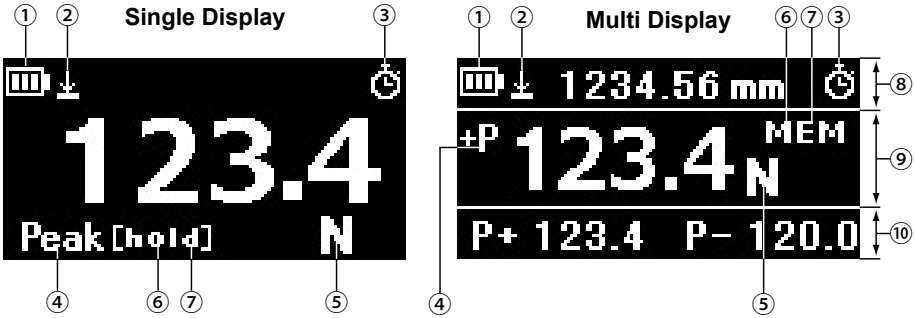

Screen Saver function

This force gauge equips with a screen saver function. It shows a moving image (right) on its screen when the force gauge is on but is not being used for a specific time for the protection of the screen.

Press MENU (MENU button) to close the screen saver display.

To set up the time period to activate this function,
go to [Function Setting] - [Display Functions] - [Auto Shut Off].

* When it is set OFF, the screen saver function does NOT work.

The Menu button only operates during the screen saver **ON**.

(*Output-Signals and Data transfer for PC recording remain active.)

To re-start the operation, return to the Menu button,
cancel the screen saver and **re-start**.

Continuous use of the Force-Gauge

- During continuous use of the Force-gauge, the use of the screen saver. Function highly recommended to protect the display from burn-in.

① **Battery** / Battery status

② **Displacement value zero** / Valid or invalid: Zero displacement value at arbitrary force value. (Refer to page 26, [8. Function Setting, Displacement reset]) (*1)

③ **Auto Zero Timer** / Valid or invalid: Zero force value after arbitrary time. (Refer to page 26, [8. Function Setting, Auto Zero Timer])

④ **Peak mode** / Valid or invalid (Refer to page 25, [8. Function Setting, Peak Functions])

⑤ **Unit** / Measurement units

⑥ **Data hold** / Valid or invalid: Holding measuring values. ([hold] is displayed instead of [mem] on Multi display, while holding values.)

⑦ **USB memory** / On: Connected, Flashing: Sending data. (*1) ([mem] is displayed on Simple display, while USB memory is connected.)

⑧ **Header** / (Refer to page 17, [6. Single display / Multi display])

⑨ **Middle display**

⑩ **Footer** / (Refer to page 18, [6. Single display / Multi display])

* 1 Only for ZTA

Separated sensor model ZTA(ZTS)-DPU

ZTA (ZTS) – DPU is connected to load cells (sensors) with cables and does not contain load cells inside.

- The load cells for ZTA(ZTS)-DPU and eZT series are different.
- eZT can be connected to various eZ Connect load cells. ZTA(ZTS)-DPU, however, cannot be used with various load cells as the amplifier requires adjustment for each load cell.
- Make sure to use the cables included to the load cells.
- A connector must be inserted to the right direction and please do not connect with force.

3. Accessories

The following accessories are included. Make sure to keep them in the carrying case. Carrying case is necessary when transport to protect the force gauge and its sensor.

Accessories of ZTA / ZTS

- **Instruction manual** (This book)
- **Inspection certificate**
- **Warranty**
- **AC adapter**
- **Carrying case**
- **8 attachments** (*)
- **USB cable**
- **Driver CD-ROM**
- **Force Recorder Professional Trial**
- **Reverse sticker** (Except for Separated sensor model and eZT)
- **Adapter for USB memory** (ZTA, eZT only)

For standard

* Type A: capacity up to 100N
* Type S: capacity from 200N to 1000N (Type SR-1: capacity 1000N only)

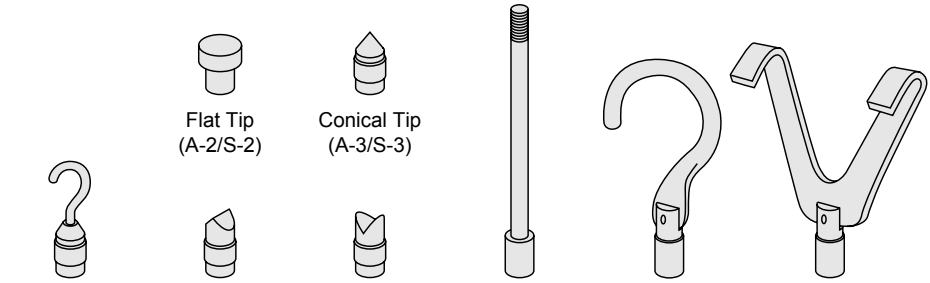

For high capacity

* Type B are included 2500 and 5000N capacity models.

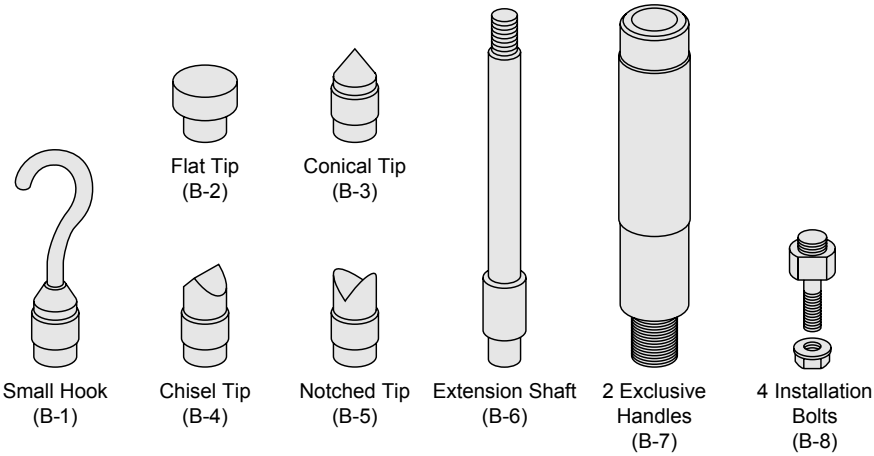

- **Separated sensor model includes different attachments depending on load cell models.**
- Standard attachments are included to ZTA(ZTS)-DPU-2N to 500N.
- High capacity attachments (B1 to B6) are included to ZTA(ZTS)-DPU-1000N to 5000N.
- No attachments are included to ZTA(ZTS)-DPU-10kN and 20kN. The sensor has female screw.
- eZT does not include either load cell or attachments.

4. Preparation

4-1. Battery and Charge

Please charge before your first use of this product.

Charging completes in approximately 2 hours when using the included AC adaptor.

The battery icon shows the 3 remaining levels. It appears after the power is turned on.

Please recharge when it shows .

It shows an animation of charging while connected with the AC adaptor.

appears once the battery is full and it automatically stops recharging.

- Make sure to use the included AC adapter only. The accuracy is not guaranteed and break down and fire may occur when use other AC adapters.
- Do not bend or apply unnecessary force on the connecting part of the gauge and the AC adaptor. It may cause damages otherwise.
- The battery may be dying when charged power is low or not charged at all. Replacement of battery is recommended. Please refer to the page 41.
- Please note the date and time setting is reset when battery dies and replaced.
- When AC adaptor remains connected, it automatically starts recharging again.
- The product may temporarily get warm while recharging.
- When the product is connected to PC with the USB cable, it shows and start recharging regardless of the remaining level of battery. Recharging this way takes longer and the required period of time varies depending of the PC.
- It shows flashing and the power goes off automatically when the battery is empty.
- When connecting a USB memory stick, a liner scale, or a test stand, the power is supplied from this product. Please use it with AC adaptor connected for such measurement as the battery runs out quicker.

4-2. Connecting to eZ Connect load cell (eZT Only)

eZT can be used with various eZ Connect load cells of your choice.
Please connect a load cell with the power off.
Turn it on to show connecting status on the amplifier as below.

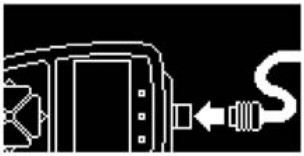

Disconnected

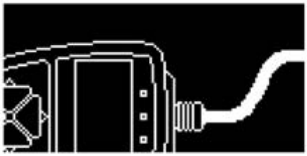

Connected

Once connected properly, the model of the eZ Connect load cell appears following the [Connected] image above. It will soon show the measurement-ready display. The rest of operation is the same as that of ZTA series.

When connection is unsuccessful, the image on the right appears.
Please check whether the connector is plugged properly.

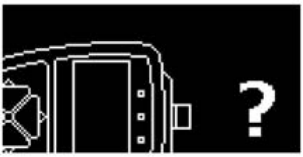

unsuccessful

- Please refer to page 42 [13-3. Overall Accuracy of eZT and eZ Connect load cell (eZT only)] for overall accuracy
- When the eZ Connect load cell is not connected properly, the following functions are disabled:
  - Any button operations except for power OFF.
  - Showing initial setting menu
  - Comparator LED lights
  - Any outer input signals except for turning power OFF.
  - All outer output signals
  - Analog output (unstable)
  - Gaining measurement data with transmission command (unstable)

4-3. Mount of Attachments

Mount appropriate attachment to the measuring shaft. The direction can be adjusted with the included nut.

- Applying the force to wrong direction or using tools to mount an attachment will cause load cell damage. For safety, please mount an attachment while checking a display value.
- The point where force is applied should come to the point where a hook crosses an extension of the gauge measuring shaft when you use a hook attachment. If force is applied at a tip of hook, it may bend or break and is very DANGEROUS.
- The weight of attachment is detected as force to the sensor. We recommend the weight of attachment should be under 10% of gauge capacity.

4-4. Mount on test stand

This force gauge can be attached to a test stand. The four holes on the back can be used for mounting. Refer to the page 46.

Standard mode

Mount the force gauge to a mounting plate of a test stand with four screws included to the test stand.

Mount the mounting plate on the test stand.

High capacity model

Attach the included four installation bolts (B-8) to the force gauge. Mount the force gauge to a mounting plate of a test stand and mount the plate on the test stand.

Refer to the instruction manual of test stand for detail.

- Make sure to use the screw with the length shorter than 6 mm (Standard model).
- Make sure to use the included bolts (B-8) to mount ZTA(ZTS)-2500N and 5000N.
- For mounting separate models or eZT on test stands, please contact us for details.

5. Basic Operation

The force gauge detects the force applied to the direction of a measuring shaft.
The measurement is done on Peak mode or Track mode.

Functions	Operation	Description
Power on	ON/OFF Press	Turn on power. The introduction message shows up first, and measurement can be started after the message disappears. The introduction message and multi display (Header) show time setting.
Shut off	ON/OFF Hold for more than one second.	Turn off power.
Zero values	ZERO Press	Zero values. Refer to the page 21 for detail.
Peak / Track mode	PEAK Press	Toggle Peak mode and Track mode.
Memory saving / Dada sending	SEND Press	Save data to the internal memory. Enable to send data to PC and other equipments at the same time. Refer to the page 21 for detail.

6. Single display / Multi display

Select either Single display or Multi display.

Refer to the page 27 for detail of toggling.

6-1. Single display

Display force value only.

* Displacement value can be checked on Multi display (ZTA, eZT only).

Single display

6-2. Multi display

Display force value on the middle display. The contents on the header and footer are selectable.

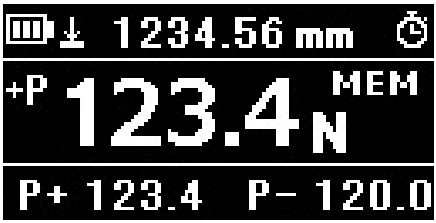

Multi display

6-3. Setting of Multi display

Press MENU (MENU button) at measurement-ready display and the header lights on.

Press SEND PEAK (SEND, PEAK button) to select contents while lighting on.

Press MENU (MENU button) and the footer lights on.

Press SEND PEAK (SEND, PEAK button) to select contents while lighting on.

Press MENU (MENU button) and go back to measurement-ready display.

6. Single display / Multi display

Refer to the page 20 for how to set.

Multi Display: Menu on header.

	Contents	Description	Valid Model
Header	**Date**	Date	ZTA/ZTS eZT
	Time	Time	ZTA/ZTS eZT
	Number of memory	The number of saved force value.	ZTA/ZTS eZT
	Number of +NG	The number of force value exceeding set comparator (High) value. Zero with ZERO (ZERO button) while this content lights on.	ZTA/ZTS eZT
	Displacement	Displacement. Zero with ZERO (ZERO button) while this content lights on. (*1)	ZTA eZT
	Average	Average of saved force value. Unit is disregarded. It shows **** when the data contains different units or positions of decimal points.	ZTA/ZTS eZT

* 1 Test stand with linear scale option is needed.

Multi Display: Menu on footer

	Contents	Description	Valid Model
Footer	**Comparator High / Low values**	Set comparator High / Low values. Enable to set the values with MENU (MENU button) while this content lights on. Change values with ON/OFF ZERO (ON/OFF, ZERO button) and enter with MENU (MENU button).	ZTA/ZTS eZT
	+/- Peak	Force peak value. Zero with ZERO (ZERO button) while this content lights on. Show either or both peak value of tensile / compression directions, depending on [AND] [OR] selection. Refer to the page 20.	ZTA/ZTS eZT
	1st / 2nd peak	1st and 2nd force peak value. Zero with ZERO (ZERO button) while this content lights on. P1 shows 1st, and P2 shows 2nd peak values.	ZTA eZT
	Force bar graph	The rate of force value among capacity.	ZTA/ZTS eZT
	The latest memory value	Show the latest memory data. Press MENU (MENU button) to show all the memory data with ON/OFF ZERO (ON/OFF, ZERO button) while this content lights on.	ZTA/ZTS eZT
	Max. / Min. values of memory	Show maximum and minimum values among memory data. Force data only.	ZTA/ZTS eZT

7. Initial Setting

1. Turn off power.

2. Hold MENU (MENU button) and turn on power with ON/OFF (ON/OFF button).

3. Select menu in Main menu with ON/OFF ZERO (ON/OFF, ZERO buttons), and go to

   Sub menu with PEAK (PEAK button). (Some menu doesn't have Sub menu.)

4. Select menu in Sub menu with ON/OFF ZERO (ON/OFF, ZERO buttons), and go to

   Setting menu with PEAK (PEAK button).

   Go back to Main menu with SEND (SEND button).

5. Select menu in Setting menu with ON/OFF ZERO (ON/OFF, ZERO buttons), and enter

   the setting with MENU (MENU button).

   (The setting can be saved only when entered with MENU button.)

6. The display automatically goes back to Sub menu after entering.

   Go back to Main menu with SEND (SEND button).

7. Push SEND to show 'Exit Menu' and go back to measurement-ready

   display with MENU (MENU button).

   * Push and hold (MENU button) more than 2 seconds for the same action.

Initial Setting (Setup Menu)

Main menu	Sub menu	Setting menu	Description	Valid model	Initial setting
Units	**Force Units**	[N] / [kN] / [mN] / [gf] / [kgf] / [ozf] / [lbf] (*1) (Valid selection differs depending on capacity.)	Change force units.	ZTA/ZTS eZT	N basis
	Displacement Units	[mm] / [°] / [inch] (*1)	Change displacement units	ZTA eZT	mm
+/- Indicator	**+/- Force**	[+/-Normal] / [+/-Reverse]	Change +/- signs of force value. [Normal] +: compression, -: tensile. [Opposite]+: tensile, -: compression	ZTA/ZTS eZT	Normal
	+/- Displacement	[+/-Normal] / [+/-Reverse]	Change +/- signs of displacement value. (*2)	ZTA eZT	Normal
Sensitivity	—	[Max] / [High] / [Medium] / [Low]	Change sensitivity of force measurement. [Max] is the highest sensitivity. [Max] is suitable for rapid change like impact test.	ZTA/ZTS eZT	Max
Displacement Type	—	[OFF] / [Type A] / [Type B] / [Type C] / [Type D] / [Type E] / [Manual]	Select when connect with displacement scale. Refer to the operation manual of test stand for detail. Enable to manually set at [Manual]. Refer to the page 28-29 for detail.	ZTA eZT (*2)	OFF

* 1 Selectable units differ between Japan model and non-Japan model.
* 2 A test stand with linear scale option is needed to measure displacement.

Main menu	Sub menu	Setting menu	Description	Valid model	Initial setting
Zero / Tare Reset	—	[All reset] / [Peak only]	Select zero contents. [All reset]: Zero all the displayed values. [Peak only]: Press the button to zero peak value. Hold the button to zero the measuring force value. Displacement value is not reset.	ZTA/ZTS eZT	All reset
Send Function	—	[Display value] / [+Peak] / [-Peak] / [+/-Peak] / [1st Peak] / [2nd Peak] / [1st/2nd Peak]	Select data sent to external equipment. [Display value]: Send displayed value. On multi display the value on the middle display is sent. [+Peak]: Send + Peak value. [-Peak]: Send - Peak value. [+/-Peak]: Send + and - Peak values. [1st Peak]: Send 1st Peak value. [2nd Peak]: Send 2nd Peak value. [1st / 2nd Peak]: Send 1st and 2nd Peak values. Refer to the page 31-32 for detail.	ZTA/ZTS eZT (*3)	Display value

In addition, the selected data is memorized into the inner memory when press [SEND], and sent to external equipments via USB/RS232C.

* 3 The function of 1st / 2nd Peak is valid only for ZTA, eZT.

Main menu	Sub menu	Setting menu	Description	Valid model	Initial setting
Send Function	**Ext-Input Invert**	[ON] / [OFF]	Choose signal setting of SEND input from outside. OFF: Read edge signal when connected to GND. ON: Read edge signal when departed GND.	ZTA/ZTS eZT	OFF
Date Format	—	[YYYY/MM/DD] / [MM/DD/YYYY] / [DD/MM/YYYY]	Select display type. Y: Year, M: Month, D: Date	ZTA/ZTS eZT	YYYY/ MM/ DD
Language	—	[Japanese] [English] and more	Select languages.	ZTA/ZTS eZT	English
Wireless Setting	**Wireless output**	[ON] / [OFF]	Enables the wireless transmission adapter (sold separately). *Refer to the Wireless Transmission Adapter Operating Manual for details.	ZTA/ZTS eZT	OFF
	ID-symbol	[A]~[Z]	A symbol for identifying a measuring instrument. Select from A to Z	ZTA/ZTS eZT	A
Setting LOCK	—	[ON] / [OFF]	It prevents unintentional changes of settings. When it is ON, function setting menu would not show therefore the settings such as comparator cannot be changed. Set it [OFF] to unlock.	ZTA/ZTS eZT	OFF
Model Info.	—	—	Product model name, Serial number, and Product code are displayed. This information is required to receive our after support.	—	—

8. Function Setting

1. Hold MENU (MENU button) for more than two seconds while power is on.

2. Select menu in Main menu with ON/OFF ZERO (ON/OFF, ZERO button), and go to

   Sub menu with PEAK (PEAK button). (Some menu doesn't have Sub menu.)

3. Select menu in Sub menu with ON/OFF ZERO (ON/OFF, ZERO button), and go to

   Setting menu with SEND (SEND button).

   (Go back to Main menu with PEAK (PEAK button.)

4. Select menu in Setting menu with ON/OFF ZERO (ON/OFF, ZERO button), and

   enter the setting with MENU (MENU button).

   (The setting can be saved only when entered with MENU button.)

5. The display automatically goes back to Sub menu after entering.

   Go back to Main menu with SEND (SEND button).

6. Push SEND to show 'Exit Menu' and go back to measurement-ready

   display with MENU (MENU button).

   * Push and hold (MENU button) more than 2 seconds for the same action.

Function Setting (Program Menu)

Main menu	Sub menu	Setting menu	Description	Valid model	Initial setting
High / Low Setpoints	**High**	+/- [0000 to 9999]	Set Hi and Low values. LED and output signal show whether the measurement value is below, within, or above the set values. -NG: Displayed value ＜ Low setpoint OK: Low setpoint ≦ Displayed value ≦ Hi setpoint +NG: Displayed value ＞ Hi setpoint	ZTA/ZTS eZT	+Capacity
	Low	+/- [0000 to 9999]			-Capacity
High / Low Output	**Value no.1**	+/- [0000 to 9999]	Set sub comparator value to judge whether displayed value reaches the set value. The result is output to external equipment. OFF: Displayed value ＜ No.1 or No.2 setpoint. ON: No.1 or No.2 setpoint ≦ Displayed value This function is only for output.	ZTA eZT	0000
	Value no.2	+/- [0000 to 9999]			0000

8. Function Setting

Main menu	Sub menu	Setting menu	Description	Valid model	Initial setting
Peak Functions	**[and] [or] Peak**	[and] / [or]	[and] Both compression and tensile peak values are displayed in order of compression peak, tensile peak, force value, with (PEAK button). [or] Either compression or tensile peak value which is higher absolute value is displayed. Refer to the page 31 for detail.	ZTA/ZTS eZT	OR
	Auto Peak Memory	[ON] / [OFF]	The data is automatically saved whenever (ZERO button) is pressed.	ZTA/ZTS eZT	OFF
	1st / 2nd Peak Drop	Absolute value [0000 to 9999]	The peak drops to detect 1st and 2nd peak values. Refer to the page 32 for detail.	ZTA eZT	0000
Displacement Reset (*1)	**Reset Condition**	[OFF] / [Once] / [Each time]	The condition to zero displacement value. [Once] Rest displacement value once when the force value reaches to the set reset value after zero values. [Each time] Zero displacement value whenever the force value reaches to the set reset value.	ZTA eZT	OFF

* 1 A test stand with linear scale (option) is needed to measure displacement.

Main menu	Sub menu	Setting menu	Description	Valid model	Initial setting
Displacement Reset (*1)	**Reset value**	Absolute value [0000 to 9999]	Zero the displacement value when the force value reached to the set value.	ZTA eZT	0000
Internal Memory	**Data recall**		The saved data in the internal memory is displayed.	ZTA/ZTS eZT	--
	Data Delete	[Last Data Delete] / [All Data Delete]	Delete the saved data.		--
USB Memory	**Export to USB**	—	Transport data in internal memory to USB memory. Refer to the page 28 for detail.	ZTA eZT	--
	USB disconnect	—	Disconnect USB memory from force gauge.		--
	Save Data Setting	[Cont-Data 100Hz] [Cont-Data 50Hz] [Cont-Data 1Hz] [Single Data]	Select data to directly save to USB memory. [Cont-Data 100, 50, 1Hz] Save real-time data of selected interval up to 3 settings from 100 data /sec to 1 data /sec. [Single Data] Save a single data.	ZTA eZT	Cont-Data 100Hz
Auto Zero Timer	—	[1 to 60 sec.] / [OFF]	Automatically zero values after set time period.	ZTA/ZTS eZT	OFF
Sound	**Keypad Beep**	[ON] / [OFF]	Operating sound of buttons.	ZTA/ZTS eZT	ON
	High / Low Alarm	[ON] / [OFF]	Alarm when the force value exceeds the comparator High setpoint.	ZTA/ZTS eZT	OFF

See P33-36 [12-1. Output to USB Memory] for details.

* 1 A test stand with linear scale (option) is needed to measure displacement.

8. Function Setting

Main menu	Sub menu	Setting menu	Description	Valid model	Initial setting
Display Functions	**Display Format**	[Single Display] / [Multi Display]	[Single Display] Display force value only. [Multi Display] Display force value on the middle display. The contents on the header and footer are selectable.	ZTA/ZTS eZT	Multi Display
	Brightness	[Bright] / [Power Save]	Adjust brightness of the display. It automatically turns to [Power Save] mode even chosen [Bright] when no-operation conducted. It goes back to [Bright] when use. (*2)	ZTA/ZTS eZT	Power Save
	Reverse Display	[ON] / [OFF]	Reverse the display up-side down. Recommended for measurement with test stand.	ZTA/ZTS eZT	OFF
	Auto Shut Off	[OFF] / [5 min] / [10 min] / [30 min] / [60 min]	Automatically shut off after the set time period when no operation conducted.	ZTA/ZTS eZT	30 min
Data and Time	**Date Set**	[Year] / [Month] / [Date]	Date & Time setting. [Hour] is on 24 hours basis.	ZTA/ZTS eZT	----/--/--
	Time Set	[Hour] / [Minute]			--:--

* 2 [Bright] mode consumes the battery more than [Power Save] mode.

9. Measurement of Displacement (ZTA, eZT only)

ZTA series and eZT can detect both force and displacement values.
(A displacement meter needed.) Displacement Type is [OFF] at default.
Select appropriate Displacement Type depending on displacement meters.

9-1. Connecting to IMADA Test Stand with Liner Scale

Instruction manuals of test stands explain types of liner scales.
Please select from [Type A] – [Type E].

9-2. Connecting to Other Liner Scale

9-2-1. Scale setup

When you choose “Manual” in “Displacement type”, you can input Manual coefficient values from “Set up Torque Gauge” of Force Logger (Included software) or Force Recorder (Optional software).
This window is opened by the following procedures.

Setup window of Force Logger

Force Logger
“Gauge Setup” in menu bar → “Gauge Setup”.

Force Recorder
“Setting” in menu bar → “Set up Force Gauge”.

Please refer to “Displacement Type” in “Initial Setup 1” of “Set up Force Gauge”.
Please select “Manual” and input displacement per 1 count of the displacement meter in the left box. After pressing Enter key, the color of the box will change, which means the manual coefficient values has been successfully reflected.

9. Measurement of Displacement (ZTA, eZT only)

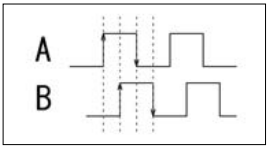

It uses phaseA and phaseB together to know the direction. It reads incremental signals input in the 2 phases. An up/down edge is regarded as 1 count, in other words, please input a quarter of 1 signal period.

For example

In the case when you combine a ZTA with the displacement scale which uses line driver output with 20μm signal period.

→ 20μm/4 = 5μm, therefore, “0.005” should be input as a manual coefficient values.

- When you choose [Manual], make sure to check the difference between the displayed displacement value and the actual displacement, by using digital length meter and so on.
- The battery is consumed more when connected with a test stand with linear scale. Please connect AC adapter or charge frequently when long hours operation.

9-2-2. Connectable displacement scale

Please use displacement scale to meet the followings.

Output specifications of displacement scale

- Line driver output *Line receiver in accordance with RS-422/485must be built-in.
- Open collector output *Voltage difference between points of contact must be below 0.5V.

* Some displacement scale may not work.
* There are some displacement scales which we have inspected their working condition with ZTA and eZT. Please contact us for further information.

Voltage and current from a HTGA torque gauge to a displacement meter

ZTA series and eZT can provide voltage up to DC+5V, and current up to 200mA to displacement meters. When you would like to supply power from a ZTA and eZT to external equipment, please Make sure to connect it to an included AC adapter.

* Operation of this instrument could be unstable when over 200mA is provided.

9-3. Display of displacement

The displacement is displayed on the header on Multi display.
Please refer to the page 17 for setting.

9-4. Display of displacement at peak force

This function is recommended when graphing is not needed such as destruction test. When displacement is displayed on the header at Peak mode on Multi display, the displacement at peak force is displayed.

* The displacement corresponds to the force value on the middle display on Multi display.
* The displacement is not displayed when [1st Peak], [2nd Peak] and [1st / 2nd Peak] is chosen as SEND button setting. In this case, the displacement can be only saved and sent to external equipment. (Send Functions: Refer to page 21.)

9-5. Displacement Zero

Zero displacement only.

Press MENU (MENU button) at measurement display and choose displacement on the header on Multi display. Press ZERO (ZERO button) to zero displacement.

* When a peak load value is indicated in middle display, you cannot zero displacement. In this case, displacement value at peak load value is indicated.

10. Peak Value

Peak is the maximum force value of measurement.

Press 

(PEAK button) and [P] or [Peak] is displayed at left side of display.

[P] and [Peak] mean Peak mode.

• In case of [OR] at Peak mode, higher peak value among compression and tensile peak values is displayed.

Press 

(PEAK button) and peak value, measuring value, and peak value are displayed in order.

• In case of [AND] at Peak mode, both peak value of compression and tensile are displayed. Press 

(PEAK button) and compression peak, tensile peak, measuring value, and compression peak are displayed in order. In case that +/- sign is chosen as [+/-Reverse], tensile peak, compression peak and measuring value in order.

11. 1st / 2nd Peak Value (ZTA, eZT only)

The peaks of the first and the second curves, instead of the peak of whole measurement, can be detected.
The 1st peak as [P1] and the 2nd peak as [P2] are displayed on the footer on Multi display.

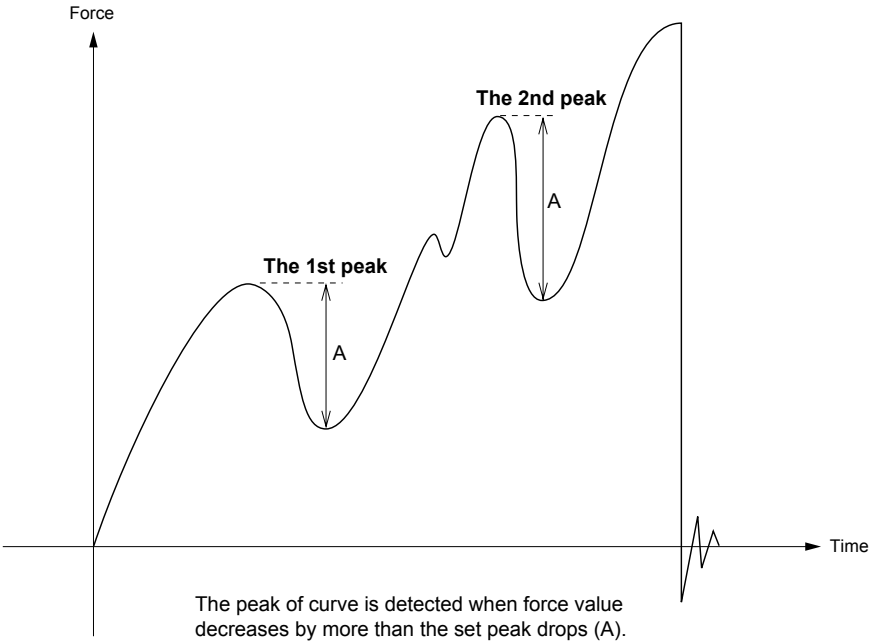

The 1st and the 2nd peak drops (decreasing value) can be set on “1st / 2nd Peak Drop” of “Peak Functions” in Program Menu. Refer to page 25. After force value increases, the peak of curve is detected as the 1st (2nd) peak when the force value decreases by more than the set peak drops. (See above picture)

* The set peak drop should be absolute value.

The 1st and the 2nd peaks can be detected on one direction (compression or tension). The direction of the 2nd peak follows one of the 1st peak.

12. Output

12-1. Output to USB memory: ZTA series and eZT only

ZTA and eZT can be connected to USB memory (excluded) using the included adapter. Data of internal memory can be sent to USB memory and measuring data of both real time and a single data can be saved in USB memory.

12-1-1. Connection to USB memory

Connect USB memory (excluded) to ZTA or eZT with included adapter. MEM (MEM mark) shows up on measurement-ready display when ZTA, eZT detects USB memory.

Valid USB memory

- USB mas storage class
- USB 2.0/1.1
- Max. current: less than 200mA
- Format: FAT16/FAT32

* Some USB memories may not work properly even when the above conditions are satisfied.
Please try another one in case MEM does not appear on the display when an USB memory is connected.

- Data cannot be output to RS232C when connected to USB memory.
- Please note that we do not guarantee data even if data in USB memory is lost when connecting to ZTA, eZT.
- Do not leave USB memory under the strong sun light to avoid transform and discoloration.
- The battery is more consumed when connected to USB memory. Please charge the battery frequently or keep the AC adapter connected to ZTA and eZT when use for a long hours.
- Some USB memory may not be used even meeting the above conditions. Please try another USB memory. Please do not connect other equipment such as USB fan and USB cleaner.

12-1-2. Data transport

Transport data in the internal memory to USB memory.

Refer to page 26. [8.Function Setting, USB Memory]

Program Menu → **USB Memory** → **Export to USB**

The following message shows up during transport. (Do not remove the USB memory.)
The message disappears when transport ends.

* Data in the internal memory is not deleted when transported. Please delete it when needed.
* Please refer to the page 50-51 for file format of USB memory.
* The data is transported to the new file of USB memory. (Not re-written)

- Do not disconnect USB memory during transport.
- Please make sure to follow the direction to disconnect USB memory, otherwise data can be lost.

12-1-3. Data saving at real time

When either Cont-Data 100, 50, or 1Hz is selected under [USB Memory] - [Save Data Setting] settings, the real time data is saved to the connected USB memory.
The data cannot be saved in the internal memory.
The saving speed is 100, 50 or 1 data per second according to the settings.

Start and stop of saving

While MEM (MEM mark) shows up, press SEND (SEND button) to start saving data in USB memory. Press SEND (SEND button) again to stop saving.

MEM (MEM mark) blinks during saving.

* Please refer to the page 50-51 for file format of USB memory.
* The data is saved in the new file of USB memory. (Not re-written)

- The recommended settings of inverval is 50 /sec or 1 /sec when recording to USB memory for a long period of time.
- Recording may stop due to USB memory capacity, speed or other factors.
- Some USB memories may show error message during recording.
- It is recommended to connect to PC and use our optional software Force Recorder for stable consecutive recording.

12-1-4. Saving single data

A single data is saved to USB memory when 'Single Data' is selected in the settings. The data cannot be saved in the internal memory.

How to save

While MEM (MEM sign) is on, press SEND (SEND button) to save the data of which selected in [SEND Functions] - [Send Data Select].

The message 'Data Saved' appears.

* See [18.3. File Format saved in then USB memory (ZTA, eZT only)] for the format of saving data.
* This operation creates a file in USB memory and adds data to it as repeated.
* In case the USB memory is disconnected and reconnected or the power turned off and back on, another new file is created with this operation.
* It may pause a while before 'Data Saved' message appears when saving for the first time after USB memory is automatically found.

12-1-5. Disconnect of USB memory

Please make sure to follow the direction below to disconnect USB memory from ZTA.

Program Menu → **USB Memory** → **USB Disconnect**

MEM (MEM mark) disappears when USB memory is ready to be disconnected.

Make sure to disconnect USB memory after MEM (MEM mark) disappears.

- UP to 100 data/sec. is saved in USB memory, while the sampling speed of ZTA is 2000 data/sec. The measuring value can differ between one displayed on ZTA and one saved in USB memory because of the speed difference.
- Optional software Force Recorder is recommended for measurement with sudden force change such as destruction test. Force Recorder can receive 2000 data/sec the same speed of ZT series.
- Do not disconnect USB memory during saving.
- Please make sure to follow the direction to disconnect USB memory, otherwise data can be lost.
- The sign of MEM (MEM mark) may not light after USB memory is repeatedly connected and disconnected. Please turn off the power and turn it back on. An error message may appear otherwise.

12-2. USB output (output to PC)

ZTA / ZTS can be connected to PC with included USB cable.

For compatible PCs, please check the operating environment of the software.

12-2-1. Connection to PC

Connect the interface of force gauge and USB port of
PC with the included USB cable.

12-2-2. Installation of driver

Turn on the force gauge while connected to PC.
The force gauge is detected as the new device. Insert the included CD-ROM to PC and follow the direction of Force Logger Installation manual.

* Installation of driver is necessary for data logger software Force Logger (included) and graphing software Force-Recorder (optional).

12-2-3. Installation of data logger software Force Logger

Install data logger software Force Logger after installation of driver.
Select CD drive in My Computer and click an icon of Setup. (CD-ROM is still inserted to PC.) Follow the direction of Force Logger Installation manual to install.

• Some PC and environment may not correspond to the CD-ROM. Please get a contact with your local distributor or us in this case.

12-3. Output on RS232C/USB

Connecting with external equipments, data transport and control of force gauges are possible. The connection is based on RS232C (optional cable) and USB (included cable).

RS232C, Condition

Data bits	8 bit
Stop bit	1 bit
Parity bit	None
Transmission rate	19200bps

Commands

The command is common among RS232C and USB interface.
The force gauge basically responses after receiving commands.
Commands and responses are consisted of ASCII code.
Commands and responses are followed by code [CR].
The force gauge responses when receive code [CR].
The force gauge sends E[CR] when a wrong command is sent.
Gain with Command + [CR] code. Please refer to the page 51-58 for commands in detail.

12-4. Analog output

12-4-1. Analog output: D/A (standard spec.)

Analog voltage is always output depending on measuring force value. (+/- 2V when max. force is applied.)

Force value can be recorded at real time by connecting to external equipments with analog cable (excluded).

Analog output

Data update: 2000 data / sec.

Zero adjustment: within +/-20mV

Accuracy: 1% or less

* Connect to the external equipments with resistance 1kΩ and more.

* The analog output is unstable when the introduction message shows up on the display. Please use the analog output during measurement.

12-4-2. Analog output: RAW (optional spec.)

The raw analog data is output without digital processing.

The response speed is fast, but zero reset is invalid. (Noise may also be detected as the data is not filtered.)

Output voltage is approx. +/-1v when max. force is applied. The voltage may differ depending on load cells of separated sensor model.

* Connect to the external equipments with input resistance 1kΩ and more.

* This option is not available with eZT.

12-5. Wireless Transmission Adapter facility

This instrument is compatible with a *Wireless Transmission Adapter (*sold separately) for the Wireless Transmission of the measurement values.

Settings as follows:

Setup Menu — **Wireless Setting** — **Wireless Output** — **ON**

When the Wireless Output ON, there are restrictions such as some functions that cannot be used at the same time.

*Refer to the Wireless Transmission Adapter Operating Manual for details.

13. Maintenance

13-1. Battery Change

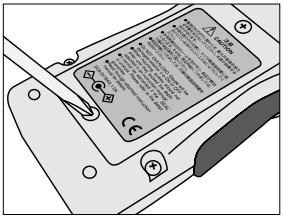

The force gauge has rechargeable battery inside. If the battery is worn out soon after charging or not charged at all, the battery is dying. Please change the batteries. (Battery model: BP-308) The direction is as follows.

Turn off the force gauge. Loosen the two screws on the back of force gauge and remove the battery cover. Take the battery out and disconnect the connector. (Pull off the connector with tweezers and needle nose pliers.)

* Please note that the cable may get bad if force to pull the cable out.

Connect the connector of the new battery. Put the new battery into the case and fix the battery cover with the screws. Make sure to store the cable of battery inside.

- Do not use any battery except BP-308. Other battery may lead break down and fire.
- The date and time setting is reset when battery is disconnected.

13-2. Calibration and Repair

We offer calibration service with charge. To maintain the best accuracy and reliable measurement, the periodical calibration is recommended. Please ask your local distributor about fee and lead time. Please note that the function setting (Program Menu) and saved data may be erased when repaired. Please make sure to send the force gauge with the carrying case to protect the gauge.

13-3. Overall Accuracy of eZT and eZ Connect load cell (eZT only)

Overall accuracy is calculated as below (e.g. eZT and eDPU-50N):

Overall Accuracy +/- 0.4%F.S. 1digit	**=**	eZT Amplifier +/- 0.2%F.S. 1digit	**+**	eDPU-50N Load cell +/- 0.2%F.S. 1digit

eZT and eZ Connect load cells can be used in various combination, therefore each is tested individually.
The amplifier and the load cell are not calibrated (actual loading calibration) together.
It is recommended to calibrate by yourself or with our calibration service.
(see page 41 [13-2 Calibration and Repair] for details)

14. Warranty

14-1. Product Warranty

We warrant the products to be free from defects in workmanship and material under normal use and proper maintenance for one year from original purchase.

* Please make sure to read through the included warranty for guarantee conditions.
* We cannot guarantee the products without warranty.

14-2. Pass Certificate for eZT Amplifier

eZT amplifiers are tested based on the company standards and checked under the environment detailed below.

* Temperature +21 to 25 degrees Celsius, Humidity 30~65%RH

We do not issue certificates for passing the checks, although only the products that have passed those tests are shipped.

15. Specifications

Model	eZT	ZTA	ZTS
Feature	Separate model connectable to various sensors with ZTA functions	Advanced model with various functions such as data saving in USB memory stick, displacement I/O and more.	Standard model with the same benefit in performance as ZTA series but reduced functions.
Accuracy	+/-0.2%F.S.+/-1digit (*1)	+/-0.2%F.S.+/-1digit (*2)	
Unit of measurement	— (*3)	N, kgf, lbf (*4)	
Display	4-digit with sign		
Display update	16 times / sec.		
Sampling rate	2000 data / sec. at maximum (*5)		
Battery	Max. 6.5 hours (Approx. 2 hours to charge)		
Overload capacity	— (*3)	Approx. 200% of capacity	
Operating environment	Temperature: 0 to +40 degree Celsius, Humidity: 20 to 80%RH		
Functions	On-demand display (header and footer), Peak hold (tension and compression), Internal memory (1000 data), High/Low Setpoints (judgment of OK or NG), Reversible display, Reversible sign, Auto Zero Timer, High/Low Alarm, Off timer (auto shut off), Sensitivity, Date and Time display		
	1st/2nd peak, Displacement detection at force peak, Displacement zero at selected force		—
Output	USB, RS232C, 2 VDC analog output (D/A), Comparator judgement (-NG/OK/+NG) Overload warning		
	High/Low Output (output of judgement) / USB memory / Displacement		—
Overload warning	Approx.110% of capacity (Warning message and alarm)		
External connecting switch	Send (a point of contact holding), Zero, Peak ON/OFF setting		
Weight	Capacity 1000N and under : Approx. 490g (*6) Capacity 2500N and 5000N: Approx. 1100g (*6) eZT: Approx.450g		
Dimensions (*7)	Capacity 1000N and under : Approx. W75 x D34 x H191 Capacity 2500N and 5000N: Approx. W83 x D44.5 x H221 eZT: Approx. W75 x D34 x H187		
Accessory	AC adapter, Inspection certificate, CD driver (including simple software for data logging), Attachments (The set of attachments varies according to range.), USB cable, Carrying case.		
	Adapter for USB flash drive (*8)		—

*1 It is the accuracy of eZT the amplifier only.
*2 The accuracy for sensor separated model differs depending on the models of connected load cell.
*3 It depends on the load cell to be used with.
*4 [N indication] The indication of 2N and 5N models is mN or N. The indication of 1000N,2500N and 5000N model is N or kN. [kgf indication] The indication of 2N and 5N models is gf. [lbf indication] The indication of 2N and 5N models is ozf.
*5 When save data in USB flash drive,the transfer rate is 100 data/sec.
*6 Weight is slightly different according to range.
*7 The dimensions of sensor separated model is W75 x D34 x H191 regardless capacity.
*8 USB flash drive is not included.

16. Optional Items

Test Stands			
For stable measurement, we recommend use force gauges with test stand.			
			
HV-500N II **Manual Test Stand**	**MX2-500N** **Motorized Test Stand**	**MX2-1000N** **Motorized Test Stand**	**MX2-2500N** **Motorized Test Stand (High capacity)**

Optional Attachments				
Various kinds of attachments are available corresponding to very diverse shape of samples.				
				
FP-50 **Fine Point Chuck**	**GR-30** **Knurled Cam Grips**	**KC-1001** **Wedge Grips**	**FC-20** **Film Grips**	**GT-30** **Vise Grips**

Handle: FOH-1	Battery: BP-308
	
Easy operation to apply high force.	Replacement battery.

16. Optional Items

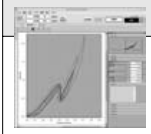

Graphing Software: Force-Recorder

A smooth and accurate graph with USB connection. (2000 data / sec.)

Main Functions	Professional	Standard	Light
Force-Time graphing	○	○	○
Function setting of force gauge	○	○	○
Data storage in CSV format	○	○	○
5 graphs (max.) can be displayed in a table.	○	○	–
Force-Displacement graphing	○	–	–

* Professional version needs ZTA, eZT and a test stand with linear scale.
* Please refer to the data sheet of software for detail.

Optional cables

Model	Function	Description
CB-108	Analog cable	Connection with multi meter, oscilloscope and so on.
CB-118	Analog cable (for option code-AN)	Connection with multi meter, oscilloscope and so on.
CB-208	RS232C cable	Connection with PC and other external equipment.
CB-508	Stand (MX) cable	Overload prevention and stand control according to measuring force.
CB-528	Stand (MX2, EMX) cable	Overload prevention and stand control according to measuring force.
CB-718	Stand (MX2-FA,EMX-FA) cable (for stand with linear scale)	Measurement of force and displacement. Overload prevention and stand control according to measuring force.
CB-728	Stand (EMX-FA) cable (for stand with linear scale)	Measurement of force and displacement. Overload prevention and stand control according to measuring force.
CB-908	Open-end cable	Cable without connector. (37 pins) For customized connection use.

We have various optional attachments and accessories adding to above.

Please ask your local distributor for detail.

17. Dimensions

Standard

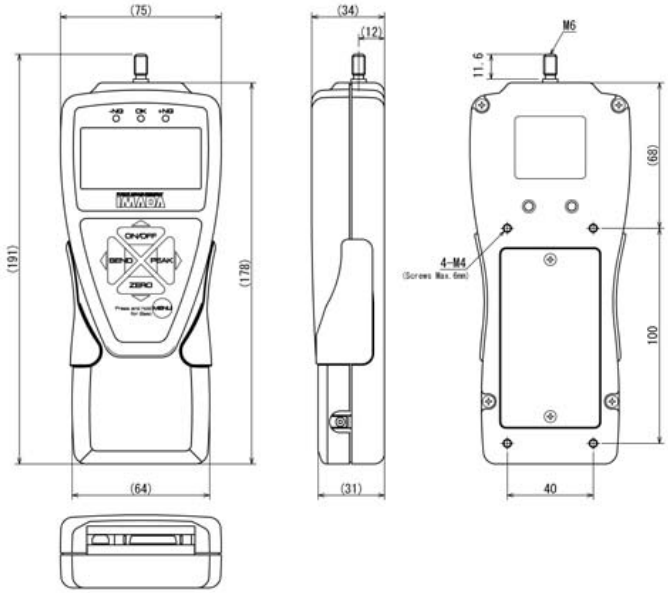

High Capacity

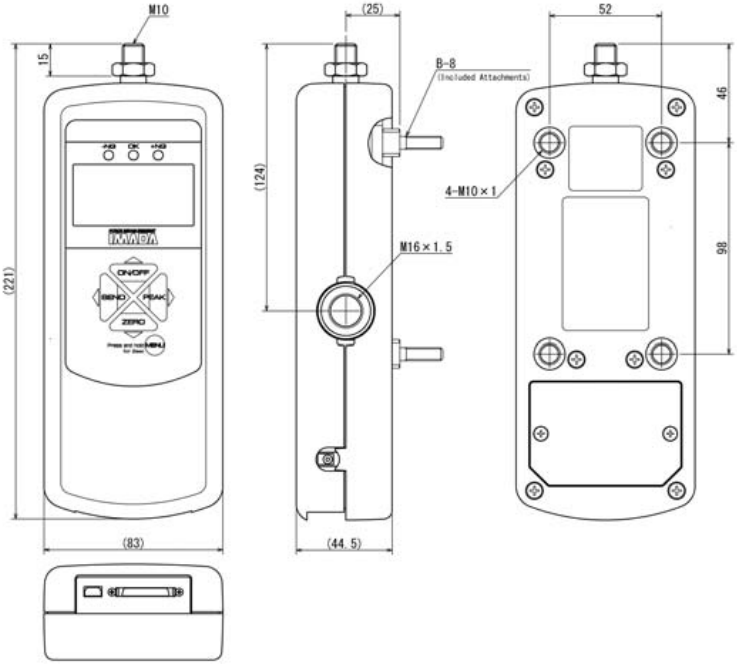

18. Output Data

18-1. I/O connector

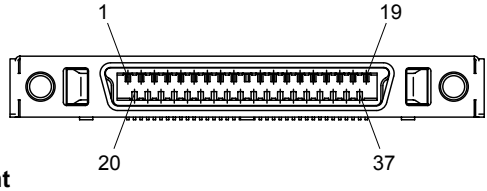

Connector pin arrangement

Pin number	Signal name	Description	Valid model
1	**-NG**	High Low setpoints of comparator output. Either signal is output depending on comparator judgment. (*1)(*4)	ZTA/ZTS eZT
2	**OK**		
3	**+NG**		
4	**SC1**	Output depending on set high / low output values. (*1)(*5)	ZTA eZT
5	**SC2**		
6	**OVL**	Overload output. Output when warning overload. (*1)	ZTA/ZTS eZT
7	**READY**	Measurement-ready signal. Output when the display is ready to start measurement. (*1)	ZTA/ZTS eZT
8	**OUT GND**	Grand common through pin #1 to 7.	ZTA/ZTS eZT
9	**ANALOG RAW +**	Analog output (RAW) (*2) (*3)	Optional
10	**ANALOG RAW -**		
11	**ANALOG D/A +**	Analog output (D/A) (*2) (*3) Approx. +/-2v is output when max. force applied.	ZTA/ZTS eZT
12	**ANALOG D/A -**		
13	**232C_TxD**	RS232C signal	ZTA/ZTS eZT
14	**232C_RxD**		
15	**232C_GND**		
16	**NC**	N/A	Optional
17	**NC**		
18	**NC**		

* 1 Open collector output. (Please keep source voltage less than 30V and current of 10mA.)
* 2 Please keep resistance 1kΩ and more.
* 3 Differential voltage output between 2 wires.
* 4 The judgment done based on the displayed value.
* 5 Real-time value is referred for judgment at all times.

Pin number	Signal name	Description	Valid model
19	**NC**	N/A	Optional
20	**NC**		
21	**NC**		
22	**NC**		
23	**NC**		
24	**EXSW1:POWER**	Input signal The functions differ depending on signal of Shift. Refer to the bottom of the page for detail. (Detect edge signal when each pin connected to GND pin #30.) (*4)	ZTA/ZTS/eZT
25	**EXSW2:ZERO**		ZTA/ZTS/eZT
26	**EXSW3:SEND**		ZTA/ZTS/eZT
27	**EXSW4:PEAK**		ZTA/ZTS/eZT
28	**Rec**		ZTA/ZTS/eZT
29	**Shift**		ZTA/ZTS/eZT
30	**GND**	Input grand common through pin #24 to 29 and 31.	ZTA/ZTS/eZT
31	**Mark Input**	Input mark point	ZTA/ZTS/eZT
32	**Scale A+**	Displacement input (*5) Connectable linear scale and rotary encoder. (Corresponds to line driver output and open collector output.)	ZTA eZT
33	**Scale A-(OC1)**		
34	**Scale B+**		
35	**Scale B- (OC2)**		
36	**+5V**	External power supply +5V (*6)	ZTA/ZTS/eZT
37	**GND**	External power supply Grand	ZTA/ZTS/eZT

* 6 Pin # 24-29 and #30 are short-circuited: ON.
* 7 Connect pin #32(A+) / #33(A-) and #34(B+) / #35(B-) in case of line driver output.
Connect pin #33(OC1) / #35(OC2) in case of open collector output. (Keep voltage drop 0.5V and less.)
* 8 Enable to supply 5V 200mA at max. Make sure to charge with AC adapter when supply power to external equipments.

Input signal depending on Shift signal

	Shift Input invalid	Shift Input valid
EXSW1	Turn on	Shut off
EXSW2	Same operation with ZERO button	Zero measuring displacement
EXSW3	Same operation with SEND button	(REVERSE)
EXSW4	Same operation with PEAK button	(REVERSE)
Rec	Control recording on software Force-Recorder series.	

18-2. Connection example of I/O terminals

Connection example to output terminal of force gauge

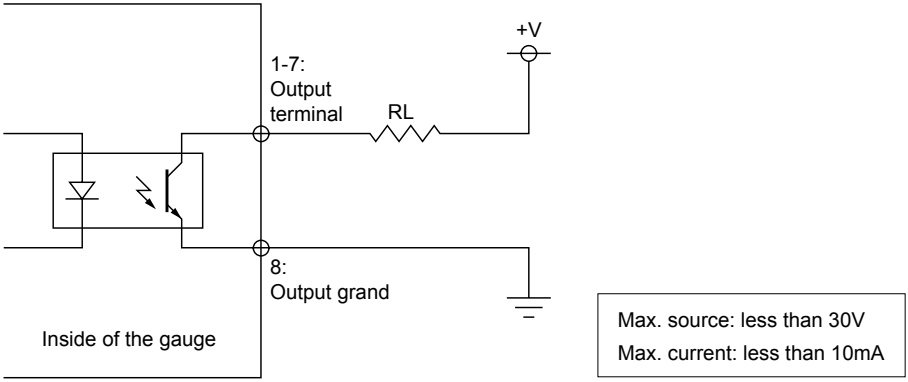

Connection example to input terminal of force gauge

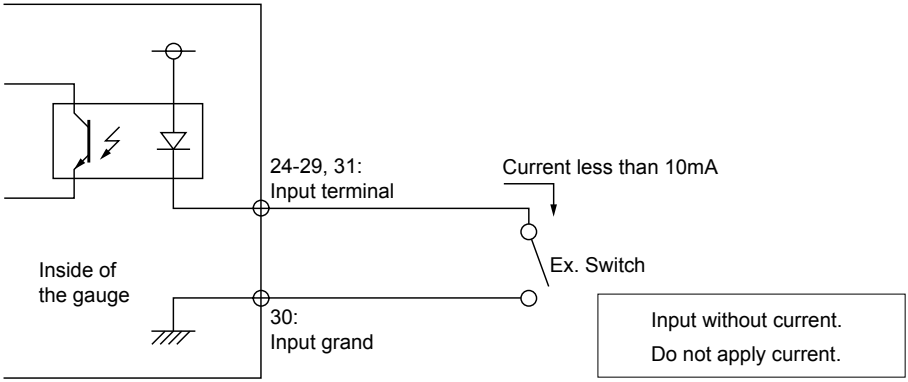

18-3. File Format saved in USB memory (ZTA, eZT only)

The file format saved in USB memory is as follows.

The files are saved in “IMADA” directory of USB memory.

	File Format	Description
Save of measuring values at real time	File name: R00001.csv Contents: RRR[CR][LF] yyyy,mm,dd,hh,nn,ss[CR][LF] ffffff,uuu,ddddddd,rrr[CR][LF] ffffff,uuu,ddddddd,rrr[CR][LF] ffffff,uuu,ddddddd,rrr[CR][LF] ...	File name: The continuous numbers follow after [R]. Each number is followed by comma and saved in CSV style. Contents: RRR: Interval of saving of real-time data yyyy: Year / mm: Month / dd: Day hh: hour (24 hours) / nn: minute / ss: second / ffffff: force value with sign and decimal point / uuu: unit for force / ddddddd: displacement value with sign and decimal point / rrr: unit for displacement The date and time is one when start saving. The file format of displacement is saved as 0 when the Displacement Type at Setup Menu is OFF.
Save of measuring values at single data	File name: S00001.csv Contents: yyyy,mm,dd,hh,nn,ss[CR][LF] YYYY,MM,DD,HH,NN,SS,ffffff,uuu,ddddddd,rrr[CR][LF] YYYY,MM,DD,HH,NN,SS,ffffff,uuu,ddddddd,rrr[CR][LF] YYYY,MM,DD,HH,NN,SS,ffffff,uuu,ddddddd,rrr[CR][LF] ...	File name: The continuous numbers follow after [S]. Each number is followed by comma and saved in CSV style. Contents: yyyy: Year / mm: Month / dd: Day hh: hour (24 hours) / nn: minute / ss: second / ffffff: force value with sign and decimal point / uuu: unit for force / ddddddd: displacement value with sign and decimal point / rrr: unit for displacement The date and time is one when start saving. The displacement data is saved as 0 when the Displacement Type at Setup Menu is OFF.

18. Output Data

	File Format	Description
Data transport saved in internal memory	File name: M00001.csv Contents: yyyy,mm,dd,hh,nn,ss[CR][LF] YYYY,MM,DD,HH,NN,SS,ffffff,uuu, ddddddd,rrr[CR][LF] YYYY,MM,DD,HH,NN,SS,ffffff,uuu, ddddddd,rrr[CR][LF] YYYY,MM,DD,HH,NN,SS,ffffff,uuu, ddddddd,rrr[CR][LF] ...	File name: The continuous numbers follow after [M]. Each number is followed by comma and saved in CSV style. Contents: yyyy: Year / mm: Month / dd: Day hh: hour (24 hours) / nn: minute / ss: second / ffffff: force value with sign and decimal point / uuu: unit for force / ddddddd: displacement value with sign and decimal point / rrr: unit for displacement The date and time is one when start saving. The displacement data is saved as 0 when the Displacement Type at Setup Menu is OFF.

18-4. Command (RS232C / USB)

Category	Command	Setting Contents	Receive	Setting	Format	Example	Description
Comparator setting	**XCW**	Comparator High / Low	○	○	XCW[±UUUU] [±LLLL]	XCW+0100-0100	Pair of integer with sign (*1) [+/-UUUU]: High [+/-LLLL]: Low
	XCS	High / Low output Value no. 1 / 2	○	○	XCS[±FFFF] [±SSSS]	XCS+0100-0100	Pair of integer with sign (*1) (*2) [+/-FFFF]: Value 1 [+/-SSSS]: Value 2
	XCR	Comparator (Judgment) result output	○	–	XCR[u]	XCRL	[u]: Comparator judgment H=+NG / O=OK / L=-NG / E=OVL D=unconnected (*3)

* 1 Decimal point is not included to setting and response. Place of decimal point depends on units.
* 2 Only for ZTA, eZT.
* 3 “D” is only responded with eZT, it means eZ Connect load cell unconnected.

Category	Command	Setting Contents	Receive	Setting	Format	Example	Description
Comparator setting	**XCO**	High / Low Output Result, Value 1	○	–	XCO[f]	XCO1	(*2) [f]: Setting value ＞ measuring value: 0 Setting value ≦ measuring value: 1
	XCT	High / Low Output Result, Value 2	○	–	XCT[s]	XCT1	(*2) [s]: Setting value ＞ measuring value: 0 Setting value ≦ measuring value: 1
Peak setting	**XDS**	Peak setting change (middle display at multi display)	○	○	XDS[n]	XDS0	[n]: number setting of peak 0= measuring value 1= Either +/- Peak value 2= +Peak 3= -Peak
Other operations	**XFU**	Unit setting of force value	○	○	XFU[s]	XFU0	[s]: number setting of unit The corresponding units differ depending on models. * Refer to XFC command
	XFT	1st / 2nd peak drop setting	○	○	XFT[bbbb]	XFT1234	[bbbb]: peak drops (four digits without sign) (*1) (*2)
	XFG	Peak selection [AND] [OR]	○	○	XFG[t]	XFG0	[t]: 0= AND / 1=OR
Reset	**XFY**	Reset peak force value and its displacement	–	○	–	R	
	XFZ	Reset measuring force value	–	○	–	R	
	XLZ	Reset measuring displacement value	–	○	–	R	Only for ZTA
	XAZ	Reset peak, force, and displacement values.	–	○	–	R	

* 1 Decimal point is not included to setting and response. Place of decimal point depends on units.
* 2 Only for ZTA, eZT.

18. Output Data

Category	Command	Setting Contents	Receive	Setting	Format	Example	Description
Memory	**XMM**	Data save in internal memory (Data contents depending on the setting of SEND button)	–	○	–	R	
	XMR	Output all the data in internal memory (1000 data)	○	–	–	[Memory Data 1] [Memory Data 2] ... END	Refer to “appended chart 1” (P57) for format.
	XMC	Delete all internal memory	–	○	–	R	
	XME	Delete the latest internal memory	–	○	–	R	
Power	**XQT**	Turn off	–	○	–	R	
Measurement value output	**XAR**	Measuring value output (Force and displacement)	○	–	Q±fffff± ddddddddPLCSX	r+123.4+ 123456701L00	Refer to “appended chart 1” (P57) for format.
	XFP	+peak / -peak output (Force and displacement)	○	–	Q±fffff± ddddddddPLCSX	p+123.4+ 123456701L00 n+123.4+ 123456701L0	Refer to “appended chart 1” (P57) for format.
	XFF	1st peak / 2nd peak output (Force and displacement)	○	–	Q±fffff± ddddddddPLCSX	1+123.4+ 123456701L00 2+123.4+ 123456701L0	Refer to “appended chart 1” (P57) for format.
	XAg	Continuous data output (Force and displacement, 1/10 sec.)	○	–	Q±fffff± ddddddddPLCSX	I+123.4+ 123456701L00	Refer to “appended chart 1” (P57) for format.

Category	Command	Setting Contents	Receive	Setting	Format	Example	Description
Measurement value output	XAG	Continuous data output (Force and displacement, 1/2000 sec.) *Error when sent to RS232C port	○	–	Q±fffff± ddddddddPLCSX	f+123.4+ 123456701L00	Refer to “appended chart 1” (P57) for format.
	XAS	Stop data output	–	○		R	
+NG	XCN	Number of +NG	○	–	XCN[nnnn]	XCN1234	[nnnn]: Number of +NG
	XCC	Reset number of +NG	–	○	–	R	
Unit	XFC	Unit list output	○	–	XFC [0][1][2][3][4][5]	XFC020511000000	Pair output (Number of unit setting and unit). 6 pairs with 2 digits integer are output. Refer to “appended chart 2” (P58) for format.
eZT (*1)	XEI	Acquire the connection status of eZ Connect load cell.	○	–	XEI[e]	XEI0	[e]: Connection status 0=Connected 1=Unconnected 2=Connecting 3= Connection Error
	XEN	Acquire the model of eZ Connect load cell.	○	–	XEN[t]	XENnnnnn	nnnnn... : Model Model name up to 32 letters

* 1 Only for eZT.

18. Output Data

Category	Command	Setting Contents	Receive	Setting	Format	Example	Description
Compatible commands	**D**	Data output (Interchangeable with ZP/Z2 format)	○	–	±FFFFF UMC	+123.4NTO	FFFFF: 4 digits force value with decimal point U: Unit number M: Current mode C: Comparator judgment
	M	Save data	–	○	–	R	
	B	Delete the latest data	–	○	–	R	
	C	Delete all data	–	○	–	R	
	Z	Zero	–	○	–	R	Operation depends on the setting of ZERO button
	V	+/- peak value output	○	–	V	P+123.4N P-123.4N	
	I	All data output (Interchangeable with ZP/Z2 format)	○	–	I	+123.4NMO +234.5NMH … END	Output pattern is the same with command D. [END] is sent after all data is output.
	N	Change units to N basis	–	○	N	R	
	K	Change units to Kgf basis	–	○	K	R	
	O	Change units to lbf basis	–	○	O	R	
	T	Change to real time mode	–	○	T	R	

Category	Command	Setting Contents	Receive	Setting	Format	Example	Description
Compatible commands	**P**	Change to Peak Mode [OR]: Display the measuring value => either higher value among +/- peak values. [AND]: Display the measuring value => + peak value => -peak value => + peak value =>...	–	○	P	R	Operation depends on the setting of PEAK button.
	E	Comparator High / Low output (HHHH/LLLL) (Absolute value of 4 digits integer)	–	○	E[HHHH][LLLL]	E12341234	HHHH=Comparator High LLLL=Comparator Low The values are absolute values.
	g	Data output every 0.1 sec. (Response is the same with command D.	○	–	g	R +123.4NTO ...	Output pattern is the same with command D.
	Y	Output stop of command g.	–	○	Y	R	

Appended Chart 1. Format of force response

Q±fffff±ddddddPLCSX

[Measuring value / Peak value]

m±fffff±ddddddPLCSYYMMDDhhmmss

[Saved data]

Description of respond data format

Q	Status of requested force data	f	Continuous output Measuring value (Approx. 2000data/sec.)
		l	Continuous output Measuring value (Approx. 10data/sec.)
		a	Continuous output +peak value
		h	Continuous output -peak value
		r	Measuring value
		p	+peak value
		n	-peak value
		1	1st peak value
		2	2nd peak value
±fffff	4 digits force value with sign and decimal point	Ex., +123.4	
±ddddddd	7 digits displacement value with sign and no decimal point	Ex., +1234567	
P	Unit number setting of force, 1 digit integer	0 to 5 (*1)	
L	Unit number setting of displacement, 1 digit integer	0 to 2 (*1)	
C	Comparator judgment	H	Judgment: +NG
		O	Judgment: OK
		L	Judgment: -NG
		E	Overloaded
		D	eZ Connect load cell unconnected (*2)
S	High / Low output	0	Less than No.1 / No.2
		1	On and more than No.1
		2	On and more than No.2
		3	On and more than No1 / No.2
X	Status of REC signal and mark point	0	No Rec input / No mark point input
		1	No Rec input / Mark point input
		2	Rec input / No mark point input
		3	Rec input / Mark point input
		4	Rec+Shift input / No mark point input
		5	Rec+Shif input / Mark point input
YYMMDD	Saved date (YY: year / MM: month / DD: day)		
hhmmss	Saved time (hh: hour / mm: minute / ss: second)		

* 1 Setting numbers and units are different depending on models. (Refer to page 54 of XFC command for detail.)
* 2 “D” is only responded with eZT.

Appended chart 2. Units list

* Setting units are different depending on models.

00	No unit
01	mN
02	N
03	kN
04	g
05	kg
07	gf (*)
08	kgf (*)
10	ozf (*)
11	lbf (*)
12	klbf (*)
13	N-cm
14	N-m
16	kgf-cm (*)
17	kgf-m (*)
22	ozf-in (*)
23	lbf-in (*)

* Units selection differs between Japan model and on-Japan model.

Appended chart 3. Unit setting numbers and units of displacement

* Setting units are different depending on models.

0	mm
1	inch (*)
2	°

* Units selection differs between Japan model and on-Japan model.

SCHMIDT
control instruments

SCHMIDT-Test-Instruments indispensable in production monitoring, quality control and automation We solve your measuring problems:

- Tension Meter
- Force Gauge
- Torque Meter
- Tachometer
- Speed- and Lengthmeter
- Electronic Lengthmeter
- Stroboscope
- Screen Printing Tension Meter
- Thickness Gauge
- Yarn Package Durometer and Shore Durometer
- Sample Cutter
- Balance
- Moisture Meter
- Leak Tester

More than 75 years - Worldwide -

Hans Schmidt & Co GmbH

Mailing address:
P. O. B. 1154
84464 Waldkraiburg Germany
Shipping address:
Schichtstr. 16
84478 Waldkraiburg Germany

Phone:
int. + 49 / (0)8638 / 9410-0
Fax:
int. + 49 / (0)8638 / 4825
int. + 49 / (0)8638 / 67898

e-mail:
info@hans-schmidt.com

Internet:
http://www.hans-schmidt.com