SCHMIDT
control instruments

Tension Sensors TSW-20K and TSW-50K

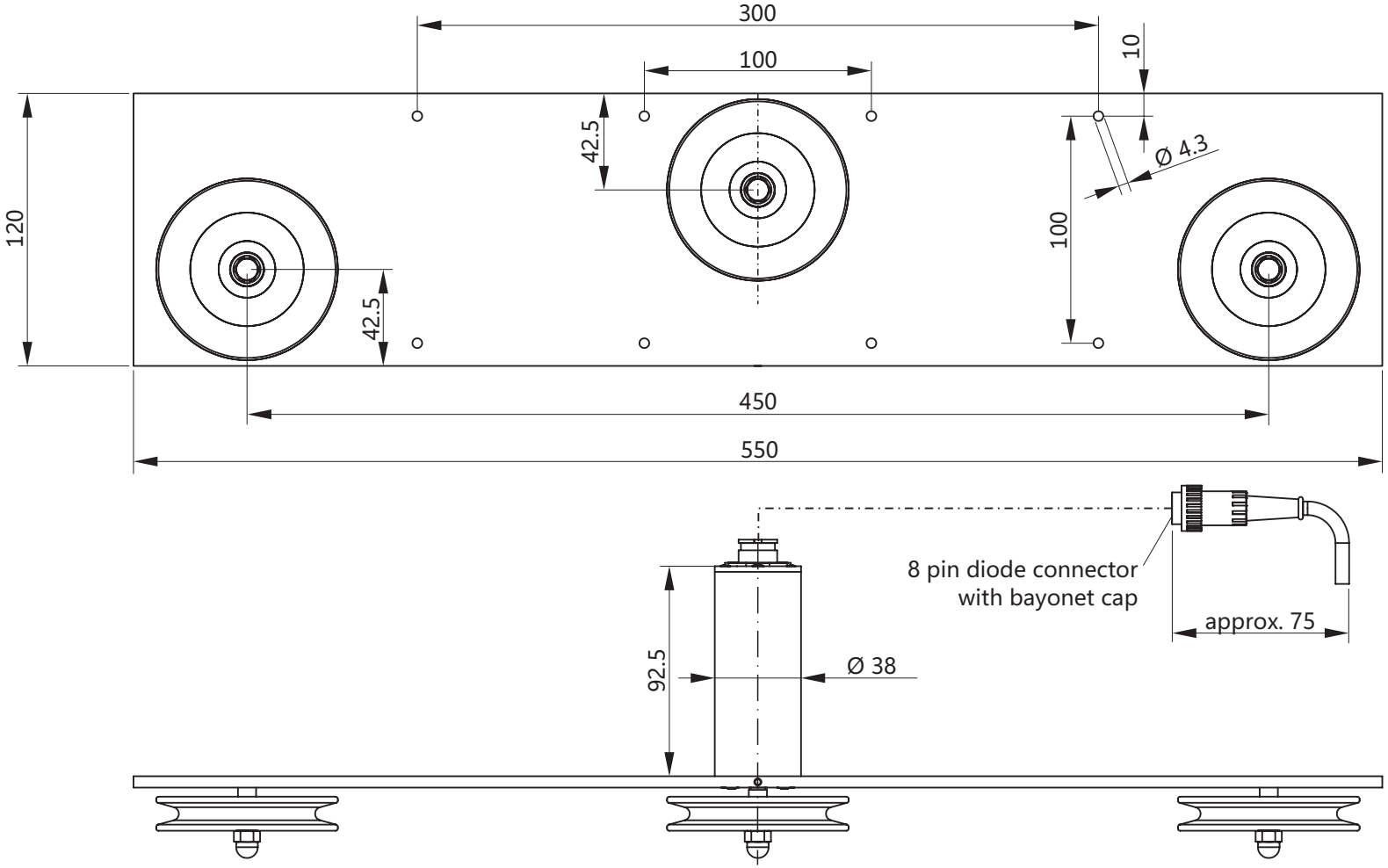

Unit: mm

Specifications subject to change without notice!

Hans Schmidt & Co GmbH
Schichtstr. 16
84464 Waldkraiburg Germany

Phone: int. + 49 / (0)8638 / 9410-0
Fax: int. + 49 / (0)8638 / 4825

e-mail: info@hans-schmidt.com
Internet: http://www.hans-schmidt.com

SCHMIDT
control instruments

Tension Sensor TSW-100K

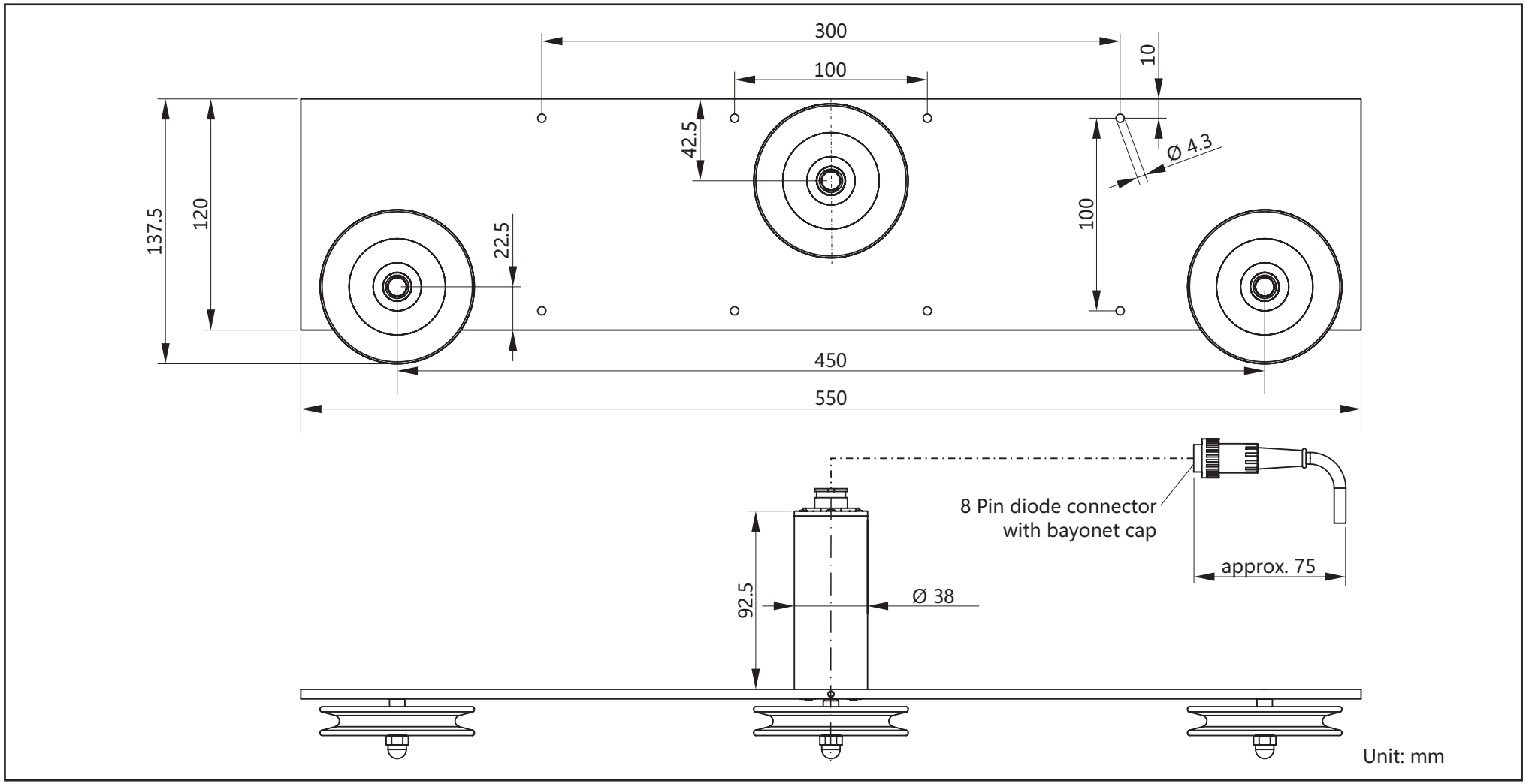

Specifications subject to change without notice!

Hans Schmidt & Co GmbH
Schichtstr. 16
84464 Waldkraiburg Germany

Phone: int. + 49 / (0)8638 / 9410-0
Fax: int. + 49 / (0)8638 / 4825

e-mail: info@hans-schmidt.com
Internet: http://www.hans-schmidt.com