SCHMIDT
control instruments

Tension Sensor MZB1-422

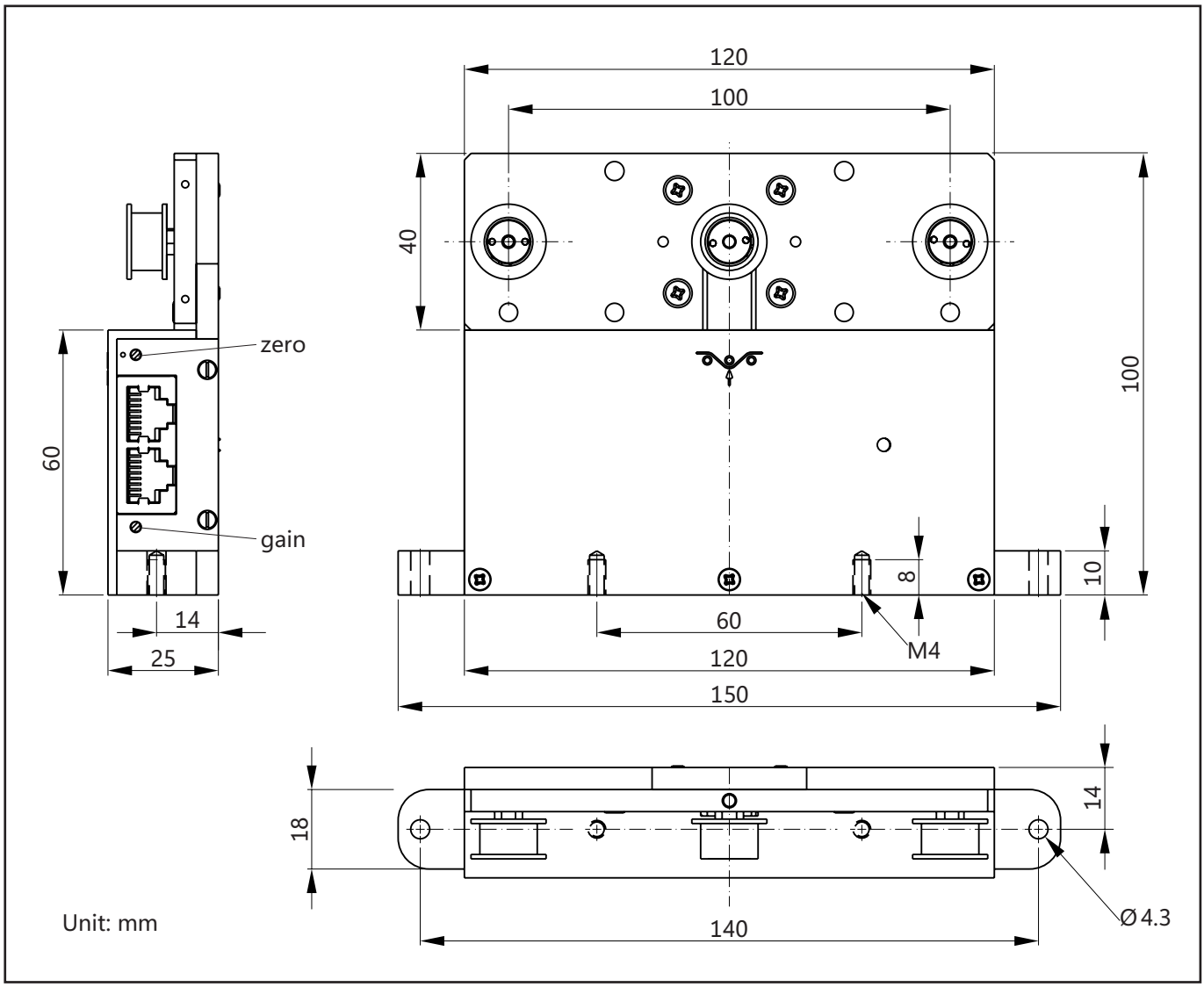

Specifications subject to change without notice!

Hans Schmidt & Co GmbH
Schichtstr. 16
84464 Waldkraiburg Germany

Phone: int. + 49 / (0)8638 / 9410-0
Fax: int. + 49 / (0)8638 / 4825

e-mail: info@hans-schmidt.com
Internet: http://www.hans-schmidt.com